GIRLS DORMITORY

LAWRENCE SCHOOL SANAWAR, SOLAN, HIMACHAL PRADESH

TENDER DRAWINGS - PHASE II (DOORS AND WINDOW)

09.10.2026

LAWRENCE SCHOOL SANAWAR

AISHWARYA TIPNIS ARCHITECTS

TENDER DRAWINGS

DRAWING LIST

S.NO	DRAWING NUMBER	DRAWING TITLE	SCALE	REMARKS
		HONORIA COURT		
1	ATA_LSS_GD_1100	GROUND FLOOR PLAN	1:100@A1	
2	ATA_LSS_GD_6101	WINDOW DETAIL W1	1:20@A2	
3	ATA_LSS_GD_6102	WINDOW DETAIL W2	1:20@A2	
4	ATA_LSS_GD_6103	WINDOW DETAIL W3	1:20@A3	
5	ATA_LSS_GD_6104	WINDOW DETAIL W3A	1:20@A3	
6	ATA_LSS_GD_6105	WINDOW DETAIL W4	1:20@A2	
7	ATA_LSS_GD_6106	WINDOW DETAIL W6	1:20@A2	
8	ATA_LSS_GD_6107	WINDOW DETAIL W7	1:20@A2	
9	ATA_LSS_GD_6108	DOOR DETAIL D1	1:20@A2	
10	ATA_LSS_GD_6109	DOOR DETAIL D2	1:20@A2	
11	ATA_LSS_GD_6110	DOOR DETAIL D3	1:20@A2	
12	ATA_LSS_GD_6111	DOOR DETAIL D4	1:20@A2	

14	ATA_LSS_GD_1100	FIRST FLOOR PLAN	1:100@A1	
15	ATA_LSS_GD_6113	WINDOW DETAIL W1	1:20@A2	
16	ATA_LSS_GD_6114	WINDOW DETAIL W2	1:20@A2	
17	ATA_LSS_GD_6115	WINDOW DETAIL W2A	1:20@A3	
18	ATA_LSS_GD_6116	WINDOW DETAIL W3	1:20@A3	
19	ATA_LSS_GD_6117	WINDOW DETAIL W3A	1:20@A3	
20	ATA_LSS_GD_6118	WINDOW DETAIL W4	1:20@A2	
21	ATA_LSS_GD_6119	WINDOW DETAIL W6	1:20@A2	
22	ATA_LSS_GD_6120	WINDOW DETAIL W7	1:20@A2	
23	ATA_LSS_GD_6121	WINDOW DETAIL W8	1:20@A2	
24	ATA_LSS_GD_6121	DOOR DETAIL D1	1:20@A2	
25	ATA_LSS_GD_6122	DOOR DETAIL D2	1:20@A2	
26	ATA_LSS_GD_6123	DOOR DETAIL D3	1:20@A2	
27	ATA_LSS_GD_6124	DOOR DETAIL D4	1:20@A2	

Door Window Schedule - Ground Floor Level					
Windows					
Name	Width (in mm)	Height (in mm)	Sill Level(in mm)	Lintel Level(in mm)	No. of items
W1	980	1690	960	2650	42
W2	540	1690	960	2650	5
W3	1200	1050	1500	2500	2
W3A	1200	1050	1420	2470	8
W4	1030	1690			3
W5	2800	1690			3
W6	500	1690			1
W7	1500	1690	960	2650	1
W8	_	_	_	_	_
TOTAL					65
Doors					
D1	1300	2650	_	2650	8
D2	960	2650	_	2650	6
D3	1050	2650	_	2650	4
D4	750	2650	_	2650	9
TOTAL					27

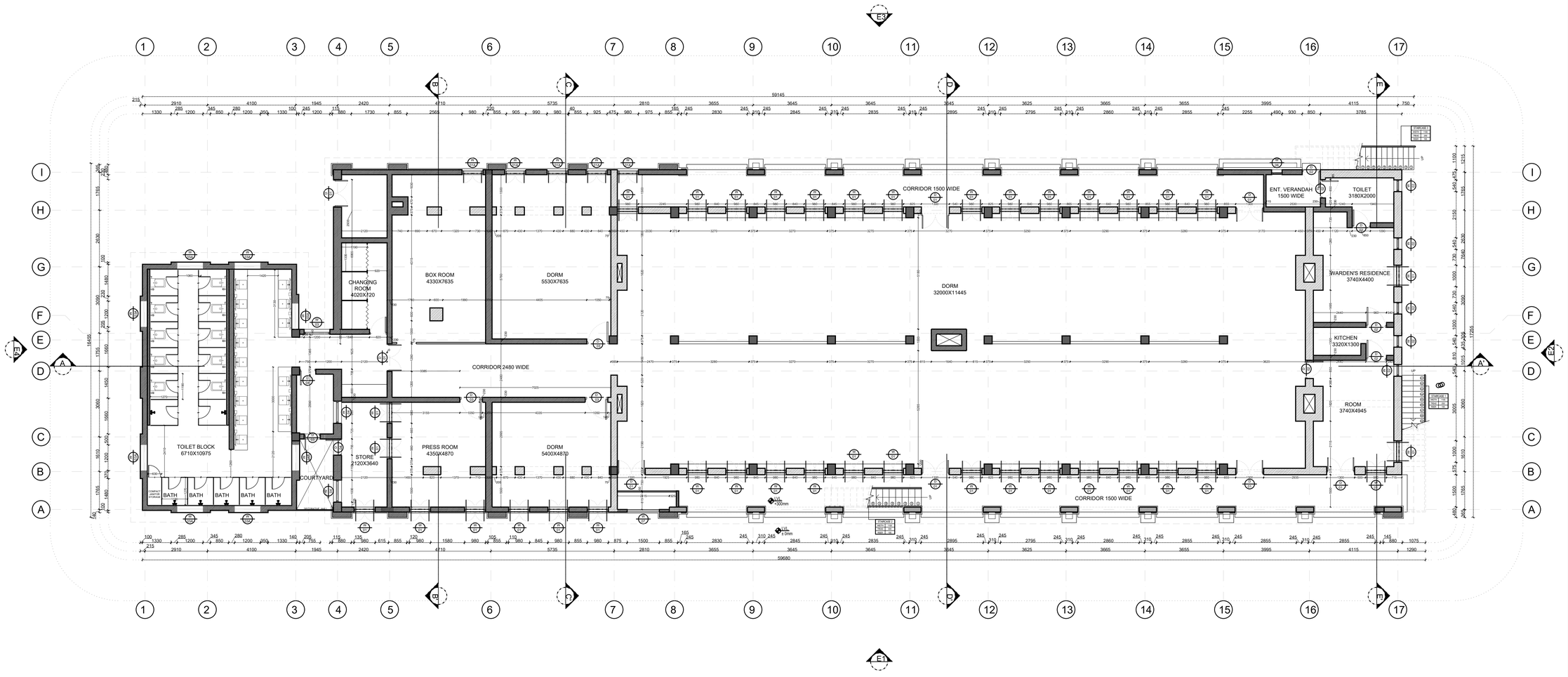

Notes:
1. Do not scale the drawings.
2. All dimensions must be checked on site and any discrepancies verified with the architect.
3. This drawing shall be read in conjunction with relevant architectural, structural, and services drawings.

© AISHWARYA TIPNIS ARCHITECTS

DRAFT FOR REVIEW

Revisions

Rev	Date	Description
R-	dd/mm/yyyy	

Consultants

Auditorium

Lighting

MEP

GD-HONORIA COURT
Lawrence School Sanawar

Date 08/10/2026
Drawing No. ATA-LSS-GD-1100
Client LSS
Drawn Amala Babu
Revision R-
Checked Vaibhav Jain

Scale 1:100@A1

Drawing
Ground Floor Plan

AISHWARYA TIPNIS ARCHITECTS
AISHWARYA TIPNIS ARCHITECTS
83-D, DDA Flats, Masjid Moth Phase II,
Greater Kailash III, New Delhi-110048
T:+ 91-11-29221690 M:91-9873926616
projects@studioata.in
www.studioata.in

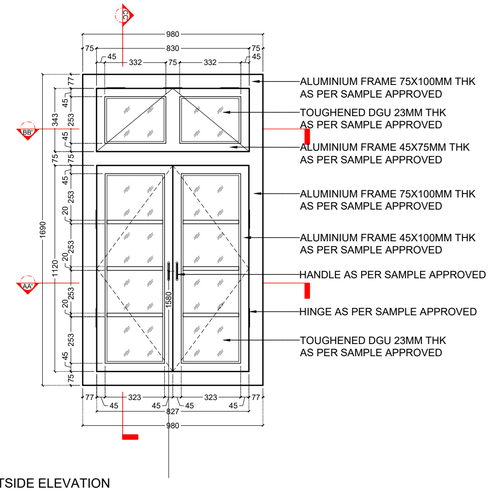

OUTSIDE ELEVATION
SCALE 1:20

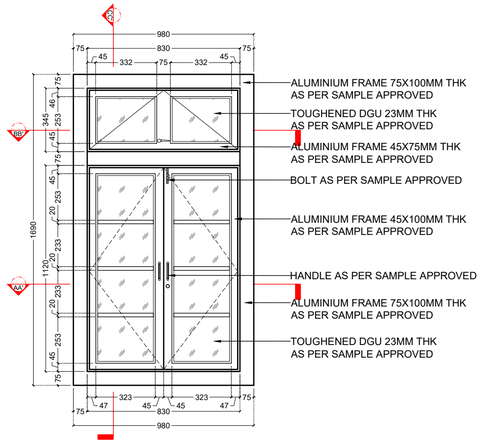

INSIDE ELEVATION
SCALE 1:20

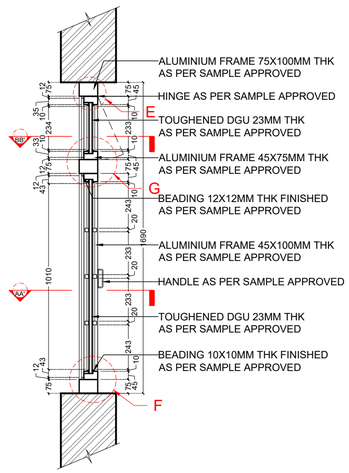

SECTION CC'
SCALE 1:20

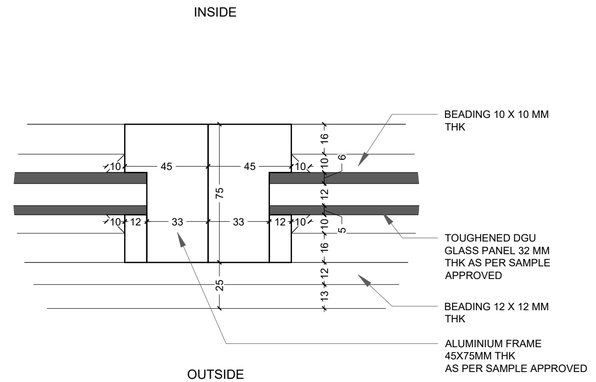

DETAIL B
SCALE 1:2

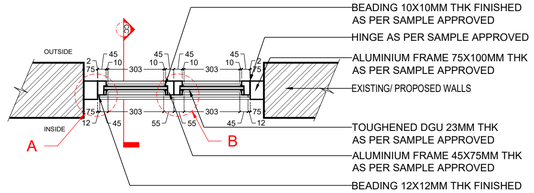

PLAN AT AA'
SCALE 1:20

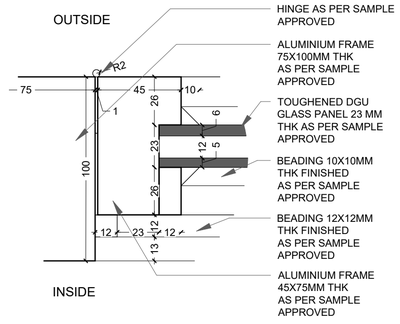

DETAIL A
SCALE 1:2

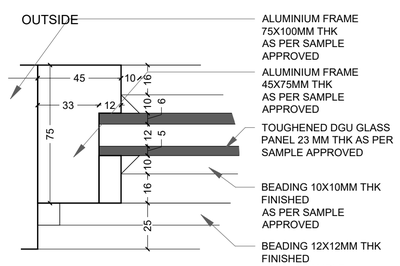

DETAIL C
SCALE 1:2

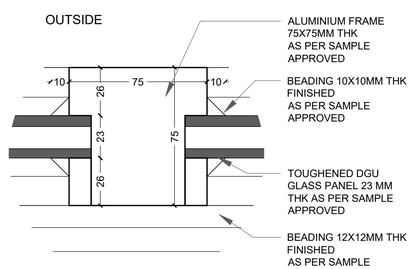

DETAIL D
SCALE 1:2

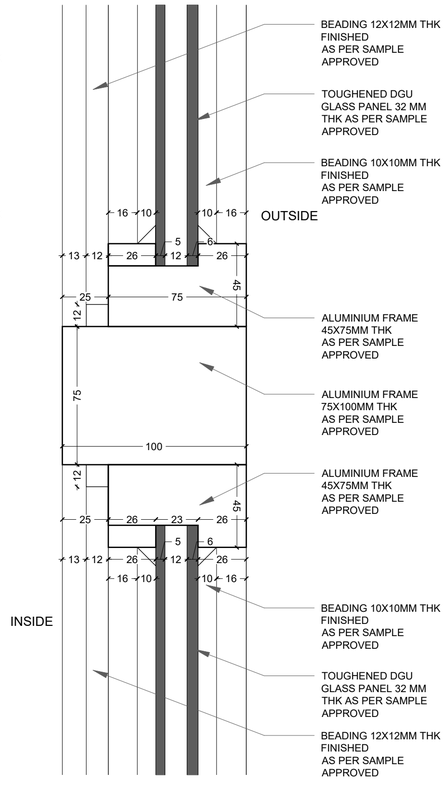

DETAIL G
SCALE 1:2

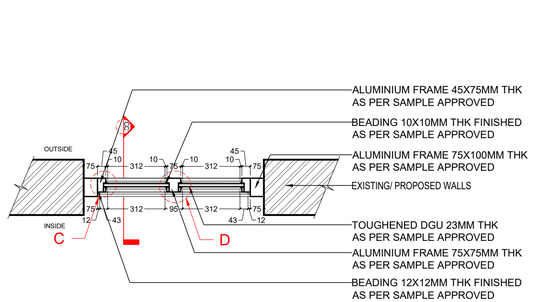

PLAN AT BB'
SCALE 1:20

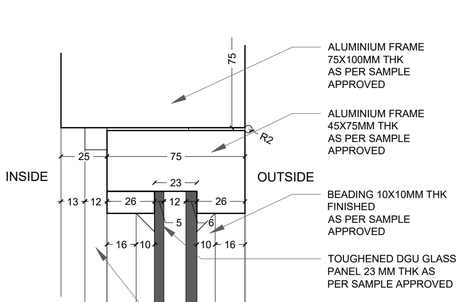

DETAIL E
SCALE 1:2

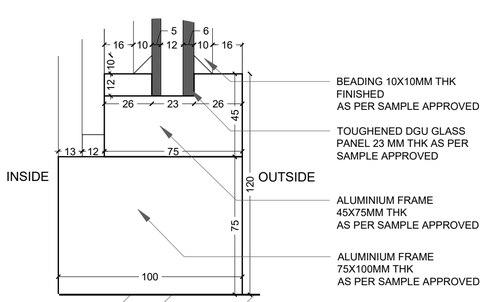

DETAIL F
SCALE 1:2

Notes:
1. Do not scale the drawings. All drawings are to be read and not measured.
2. All dimensions must be checked on site and any discrepancies verified with the architect.
3. This drawing shall be read in conjunction with relevant architectural, structural, and services drawings.
4. Window drawings are for intent only, final windows to be fabricated per approved shop drawings
5. All the windows to be made lockable using Allen Key lock; to be operated only by hotel staff.

© AISHWARYA TIPNIS ARCHITECTS

B. GENERAL ARRANGEMENT (PROPOSED)

TENDER DRAWINGS - DOOR AND WINDOW DETAILS

DOOR WINDOW SCHEDULE

Name	Width (in mm)	Height (in mm)	Sill Level(in mm)	Lintel Level(in mm)
W1	980	1690	960	2650

NOTE- THE SHOP DRAWINGS ARE TO BE MADE BY THE VENDOR

Revisions

Rev	Date	Description
R-00		

Consultants

Auditorium

Lighting

MEP

GD-HONORIA COURT
Lawrence School Sanawar

Date 09/10/2026
Drawing No. ATA-LSS-GD-6100
Client LSS
Drawn Sanskriti Garg
Revision R- 00
Checked Vaibhav Jain

Scale 1:20/1:2

Drawing
DW SCHEDULE- W1

AISHWARYA TIPNIS ARCHITECTS
83-D, DDA Flats, Masjid Moth Phase II,
Greater Kailash III, New Delhi-110048
T:+ 91-11-29221690 M:91-9873926616
projects@studioata.in
www.studioata.in

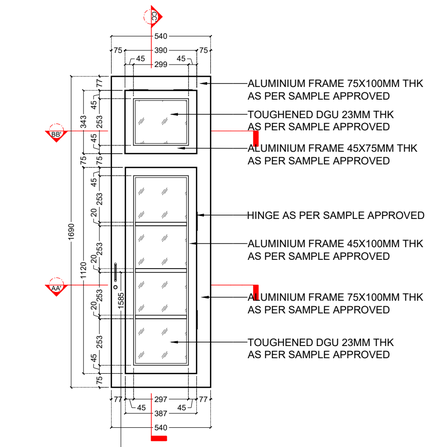

OUTSIDE ELEVATION
SCALE 1:20

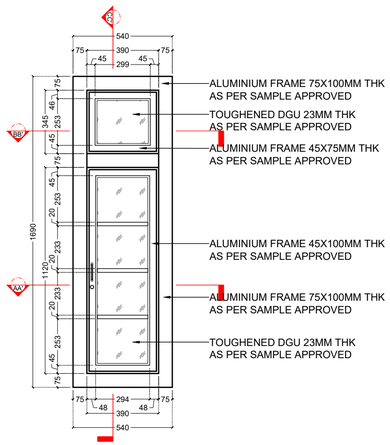

INSIDE ELEVATION
SCALE 1:20

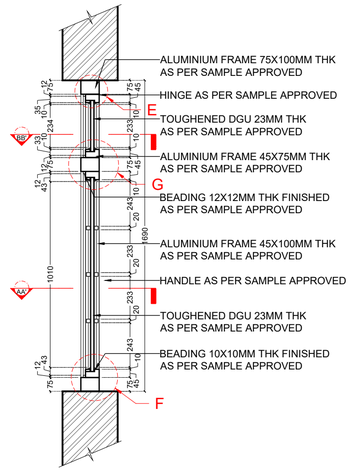

SECTION CC'
SCALE 1:20

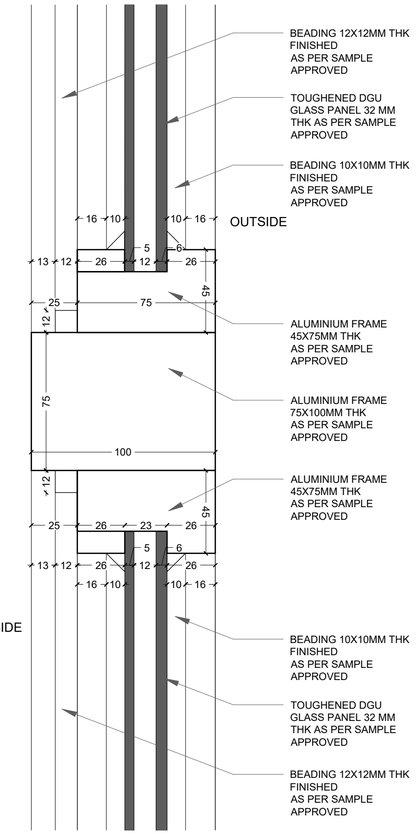

DETAIL G
SCALE 1:2

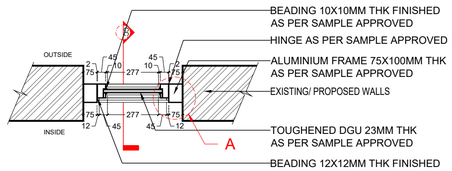

PLAN AT AA'
SCALE 1:20

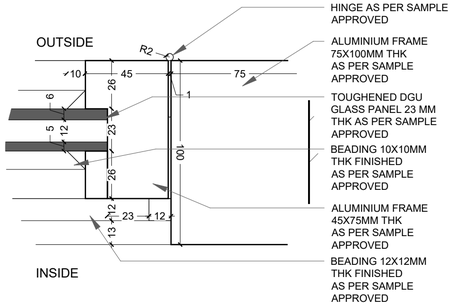

DETAIL A
SCALE 1:2

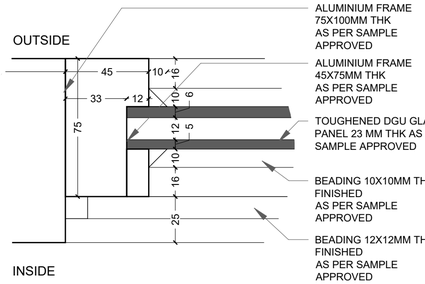

DETAIL B
SCALE 1:2

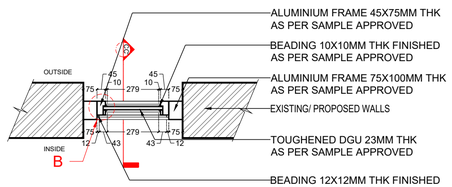

PLAN AT BB'
SCALE 1:20

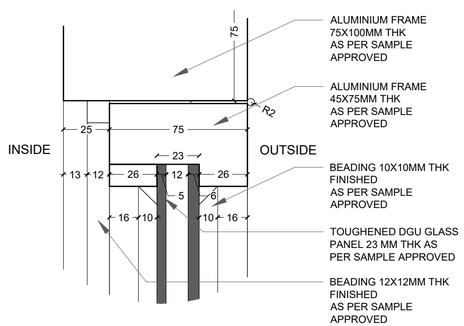

DETAIL E
SCALE 1:2

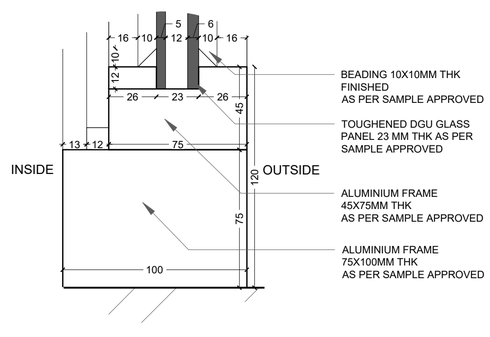

DETAIL F
SCALE 1:2

Notes:
1. Do not scale the drawings. All drawings are to be read and not measured.
2. All dimensions must be checked on site and any discrepancies verified with the architect.
3. This drawing shall be read in conjunction with relevant architectural, structural, and services drawings.
4. Window drawings are for intent only, final windows to be fabricated per approved shop drawings
5. All the windows to be made lockable using Allen Key lock; to be operated only by hotel staff.

© AISHWARYA TIPNIS ARCHITECTS

B. GENERAL ARRANGEMENT (PROPOSED)

TENDER DRAWINGS - DOOR AND WINDOW DETAILS

DOOR WINDOW SCHEDULE

Name	Width (in mm)	Height (in mm)	Sill Level(in mm)	Lintel Level(in mm)
W2	540	1690	960	2650

NOTE- THE SHOP DRAWINGS ARE TO BE MADE BY THE VENDOR

Revisions

Rev	Date	Description
R-00		

Consultants

Auditorium

Lighting

MEP

GD-HONORIA COURT
Lawrence School Sanawar

Date 09/10/2026
Drawing No. ATA-LSS-GD-6101
Client LSS
Drawn Sanskriti Garg
Revision R- 00
Checked Vaibhav Jain

Scale 1:20/1:2

Drawing DW SCHEDULE- W2

AISHWARYA TIPNIS ARCHITECTS
83-D, DDA Flats, Masjid Moth Phase II,
Greater Kailash III, New Delhi-110048
T:+ 91-11-29221690 M:91-9873926616
projects@studioata.in
www.studioata.in

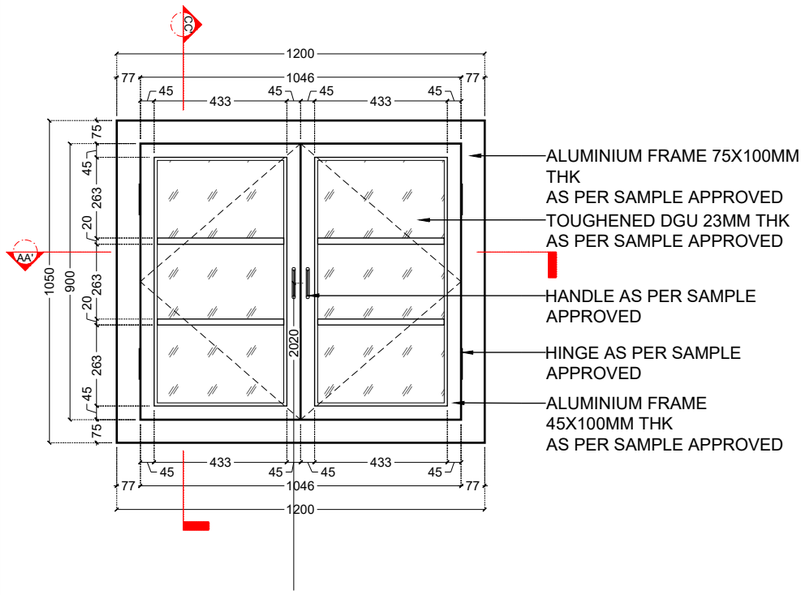

OUTSIDE ELEVATION
SCALE 1:20

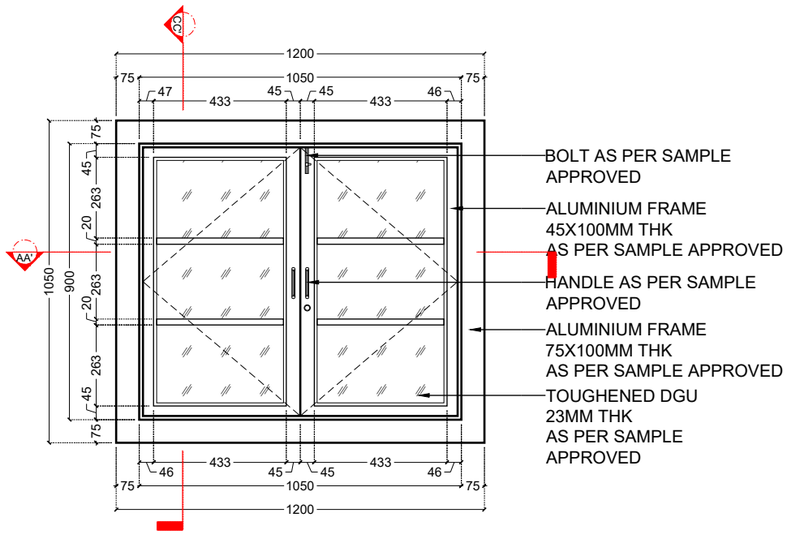

INSIDE ELEVATION
SCALE 1:20

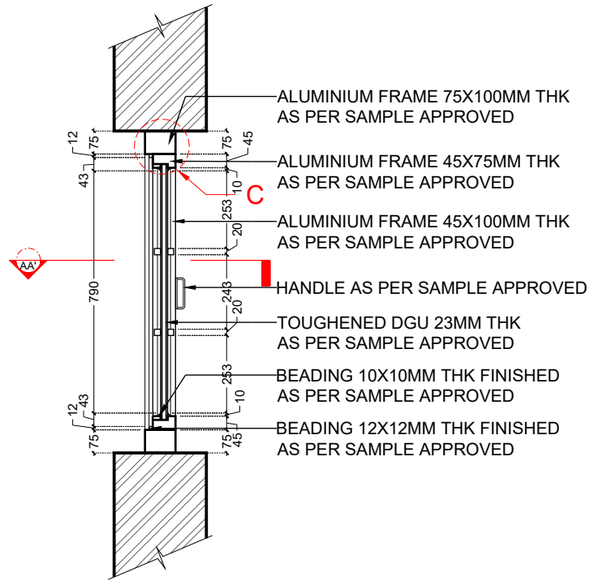

SECTION BB'
SCALE 1:20

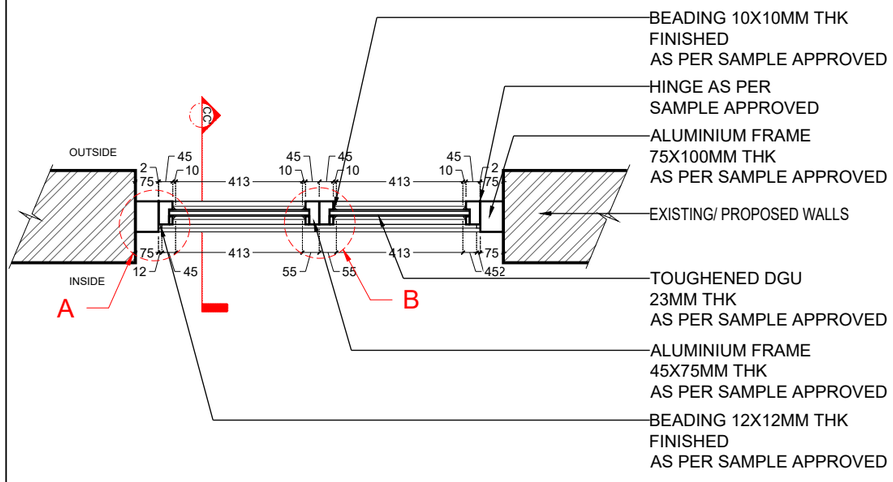

PLAN AT AA' (SHUTTER WINDOW)
SCALE 1:20

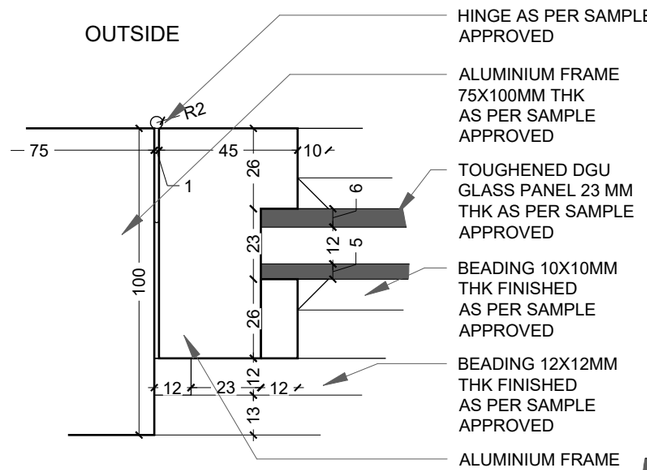

DETAIL A
SCALE 1:2

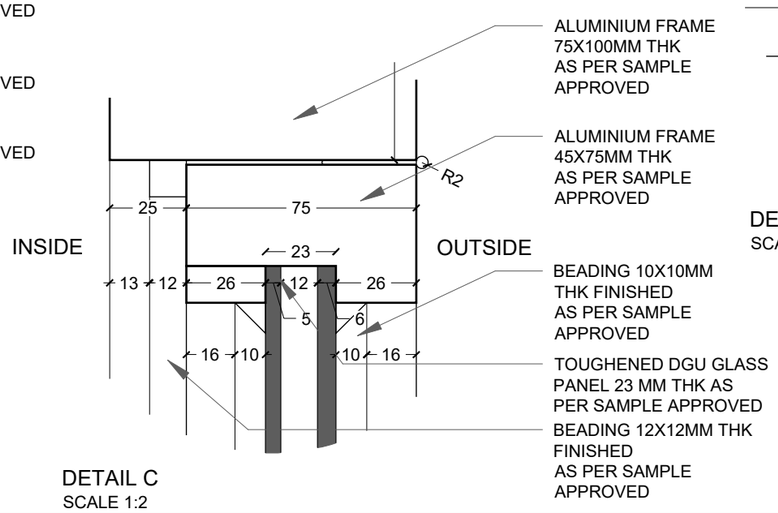

DETAIL C
SCALE 1:2

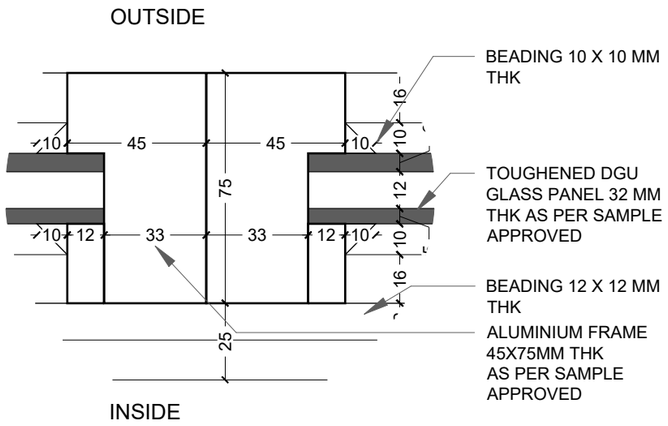

DETAIL B
SCALE 1:2

Notes:
1. Do not scale the drawings. All drawings are to be read and not measured.
2. All dimensions must be checked on site and any discrepancies verified with the architect.
3. This drawing shall be read in conjunction with relevant architectural, structural, and services drawings.
4. Window drawings are for intent only, final windows to be fabricated per approved shop drawings
5. All the windows to be made lockable using Allen Key lock; to be operated only by hotel staff.

© AISHWARYA TIPNIS ARCHITECTS

B. GENERAL ARRANGEMENT (PROPOSED)

TENDER DRAWINGS - DOOR AND WINDOW DETAILS

DOOR WINDOW SCHEDULE

Name	Width (in mm)	Height (in mm)	Sill Level(in mm)	Lintel Level(in mm)
W3	1200	1050	1500	2550

NOTE- THE SHOP DRAWINGS ARE TO BE MADE BY THE VENDOR

Revisions

Rev	Date	Description
R- 00		

Consultants

Auditorium

Lighting

MEP

GD-HONORIA COURT
Lawrence School Sanawar

Date 09/10/2026
Drawing No. ATA-LSS-GD-6103
Client LSS
Drawn Sanskriti Garg
Revision R- 00
Checked Vaibhav Jain

Scale 1:20/1:2

Drawing DW SCHEDULE- W3

AISHWARYA TIPNIS ARCHITECTS
83-D, DDA Flats, Masjid Moth Phase II,
Greater Kailash III, New Delhi-110048
T:+ 91-11-29221690 M:91-9873926616
projects@studioata.in
www.studioata.in

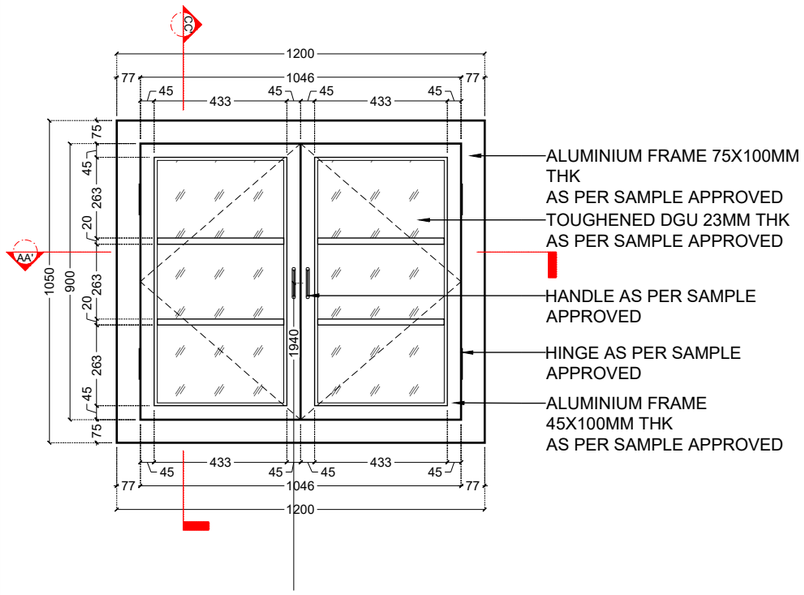

OUTSIDE ELEVATION
SCALE 1:20

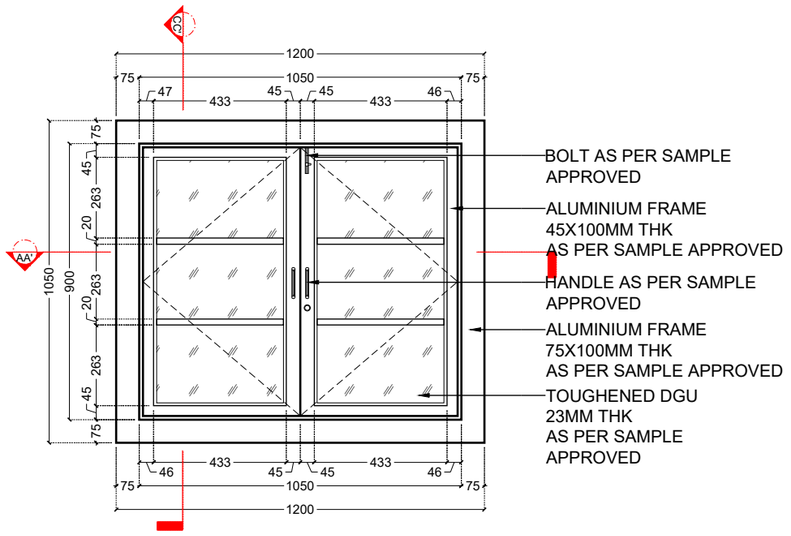

INSIDE ELEVATION
SCALE 1:20

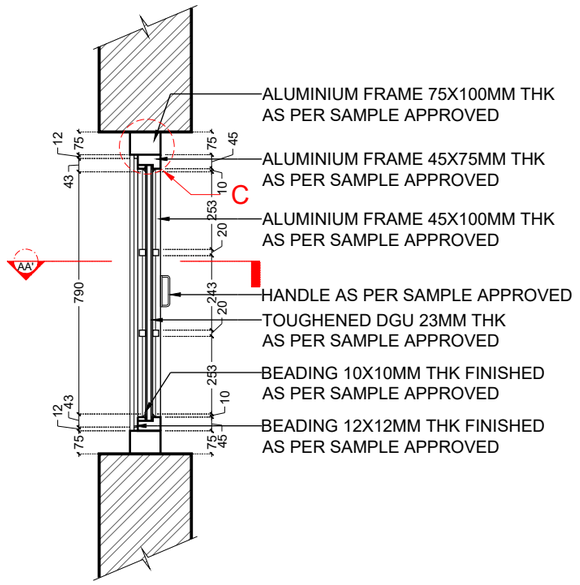

SECTION BB'
SCALE 1:20

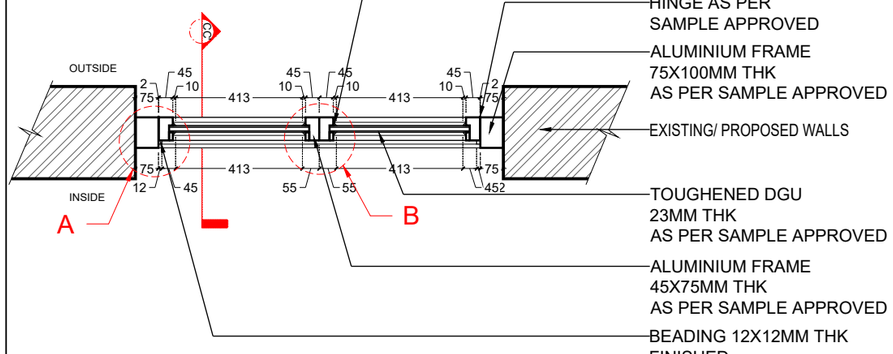

PLAN AT AA' (SHUTTER WINDOW)
SCALE 1:20

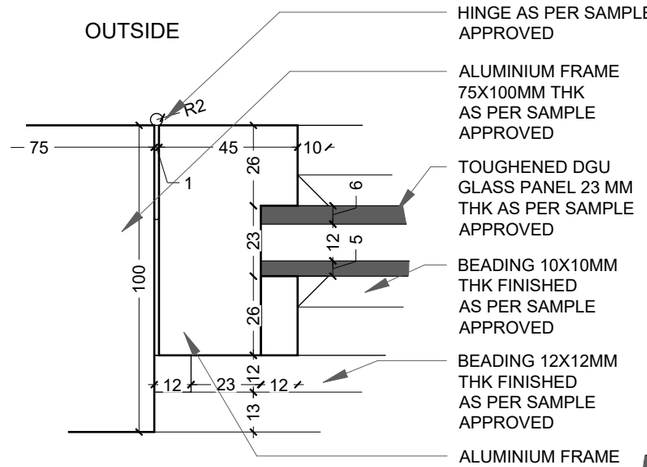

DETAIL A
SCALE 1:2

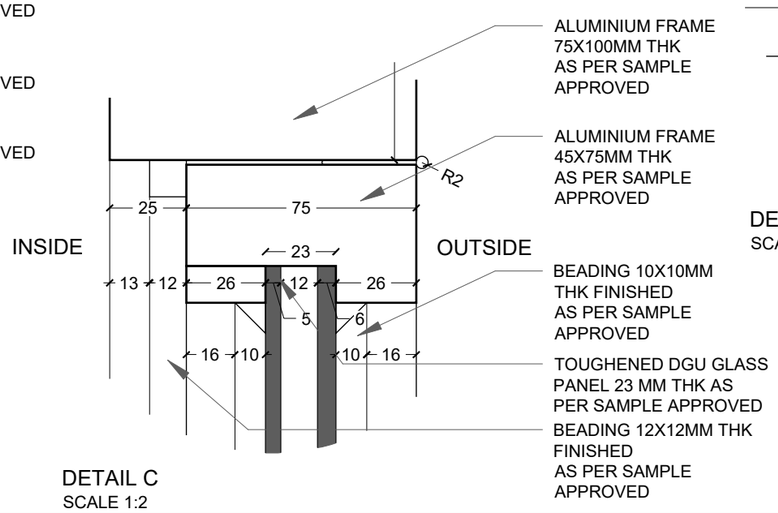

DETAIL C
SCALE 1:2

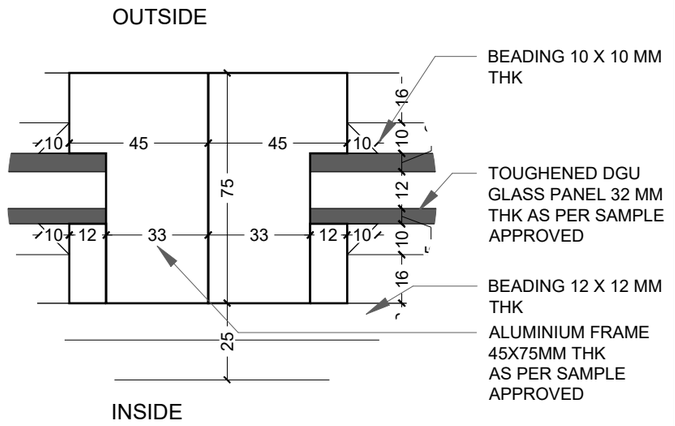

DETAIL B
SCALE 1:2

Notes:
1. Do not scale the drawings. All drawings are to be read and not measured.
2. All dimensions must be checked on site and any discrepancies verified with the architect.
3. This drawing shall be read in conjunction with relevant architectural, structural, and services drawings.
4. Window drawings are for intent only, final windows to be fabricated per approved shop drawings
5. All the windows to be made lockable using Allen Key lock; to be operated only by hotel staff.

© AISHWARYA TIPNIS ARCHITECTS

B. GENERAL ARRANGEMENT (PROPOSED)

TENDER DRAWINGS - DOOR AND WINDOW DETAILS

DOOR WINDOW SCHEDULE

Name	Width (in mm)	Height (in mm)	Sill Level(in mm)	Lintel Level(in mm)
W3A	1200	1050	1400	2470

NOTE- THE SHOP DRAWINGS ARE TO BE MADE BY THE VENDOR

Revisions

Rev	Date	Description
R- 00		

Consultants

Auditorium

Lighting

MEP

GD-HONORIA COURT
Lawrence School Sanawar

Date 09/10/2026
Drawing No. ATA-LSS-GD-6104
Client LSS
Drawn Sanskriti Garg
Revision R- 00
Checked Vaibhav Jain

Scale 1:20/1:2

Drawing DW SCHEDULE- W3A

AISHWARYA TIPNIS ARCHITECTS
83-D, DDA Flats, Masjid Moth Phase II,
Greater Kailash III, New Delhi-110048
T:+ 91-11-29221690 M:91-9873926616
projects@studioata.in
www.studioata.in

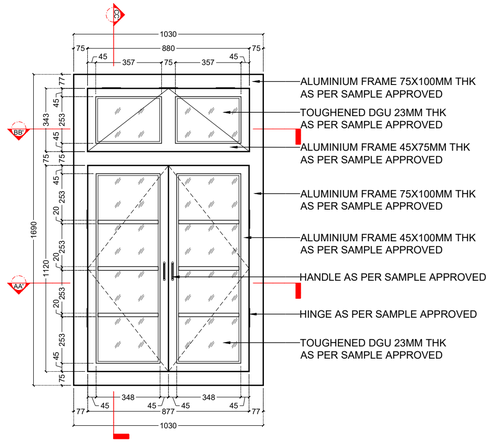

OUTSIDE ELEVATION
SCALE 1:20

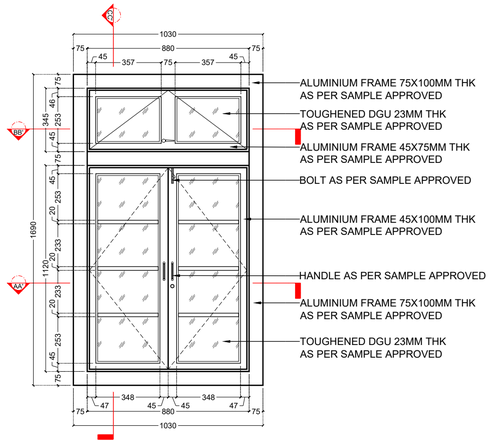

INSIDE ELEVATION
SCALE 1:20

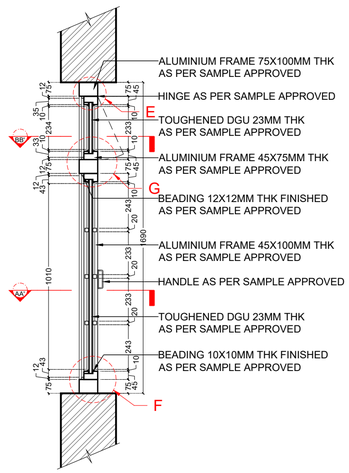

SECTION CC'
SCALE 1:20

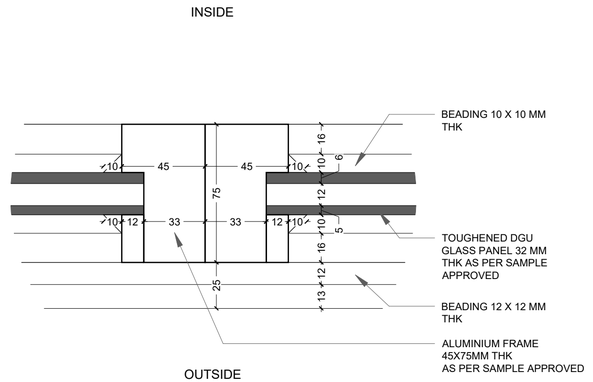

DETAIL B
SCALE 1:2

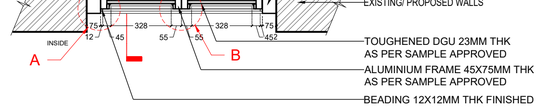

PLAN AT AA'
SCALE 1:20

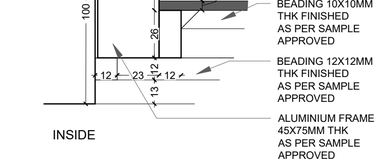

DETAIL A
SCALE 1:2

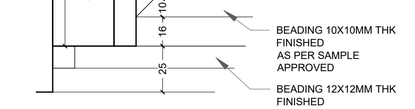

DETAIL C
SCALE 1:2

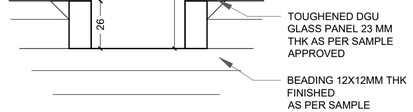

DETAIL D
SCALE 1:2

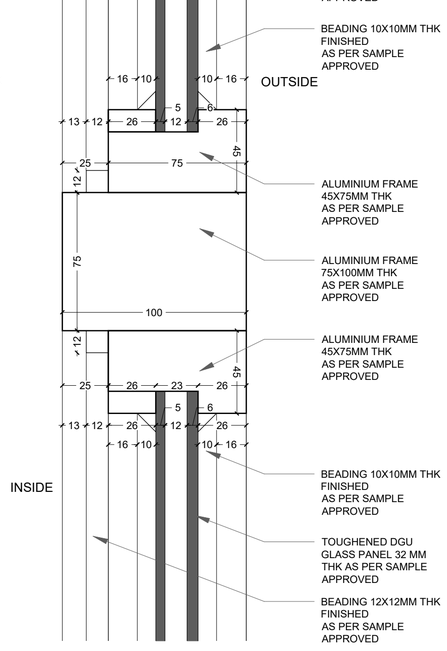

DETAIL G
SCALE 1:2

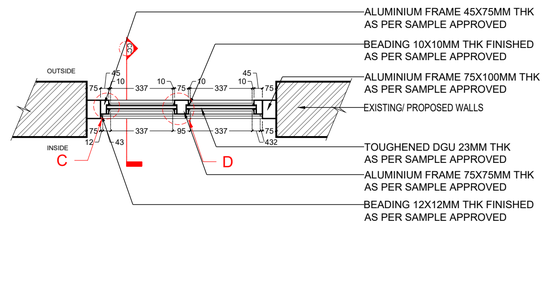

PLAN AT BB'
SCALE 1:20

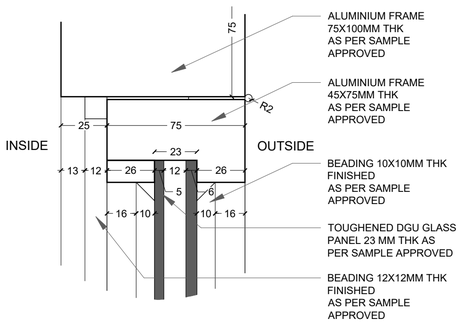

DETAIL E
SCALE 1:2

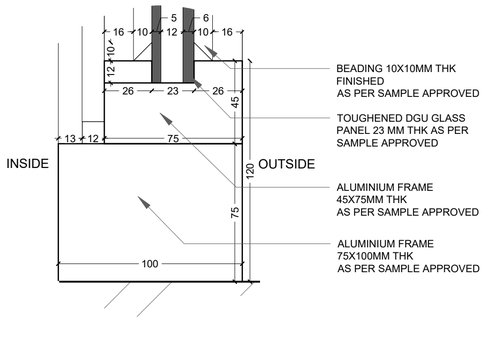

DETAIL F
SCALE 1:2

Notes:
1. Do not scale the drawings. All drawings are to be read and not measured.
2. All dimensions must be checked on site and any discrepancies verified with the architect.
3. This drawing shall be read in conjunction with relevant architectural, structural, and services drawings.
4. Window drawings are for intent only, final windows to be fabricated per approved shop drawings
5. All the windows to be made lockable using Allen Key lock; to be operated only by hotel staff.

© AISHWARYA TIPNIS ARCHITECTS

B. GENERAL ARRANGEMENT (PROPOSED)

TENDER DRAWINGS - DOOR AND WINDOW DETAILS

DOOR WINDOW SCHEDULE

Name	Width (in mm)	Height (in mm)	Sill Level(in mm)	Lintel Level(in mm)
W4	1030	1690		

NOTE- THE SHOP DRAWINGS ARE TO BE MADE BY THE VENDOR

Revisions

Rev	Date	Description
R-00		

Consultants

Auditorium

Lighting

MEP

GD-HONORIA COURT
Lawrence School Sanawar

Date
09/10/2026

Drawing No.
ATA-LSS-GD-6105

Client
LSS

Drawn
Sanskriti Garg

Revision
R- 00

Checked
Vaibhav Jain

Scale
1:20/1:2

Drawing
DW SCHEDULE- W4

AISHWARYA TIPNIS ARCHITECTS
83-D, DDA Flats, Masjid Moth Phase II,
Greater Kailash III, New Delhi-110048
T:+ 91-11-29221690 M:91-9873926616
projects@studioata.in
www.studioata.in

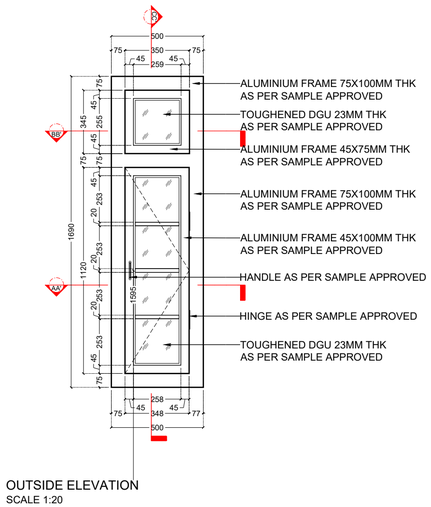

OUTSIDE ELEVATION
SCALE 1:20

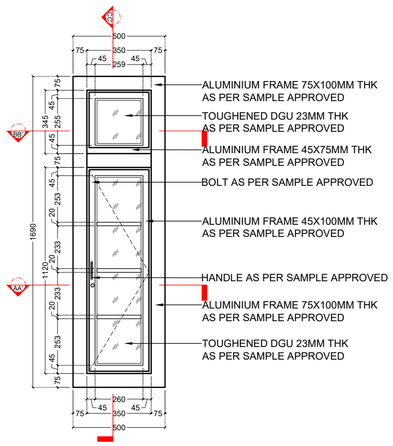

INSIDE ELEVATION
SCALE 1:20

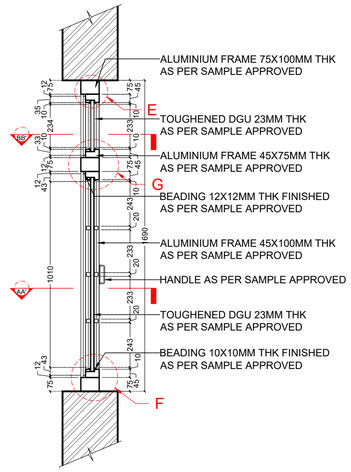

SECTION CC'
SCALE 1:20

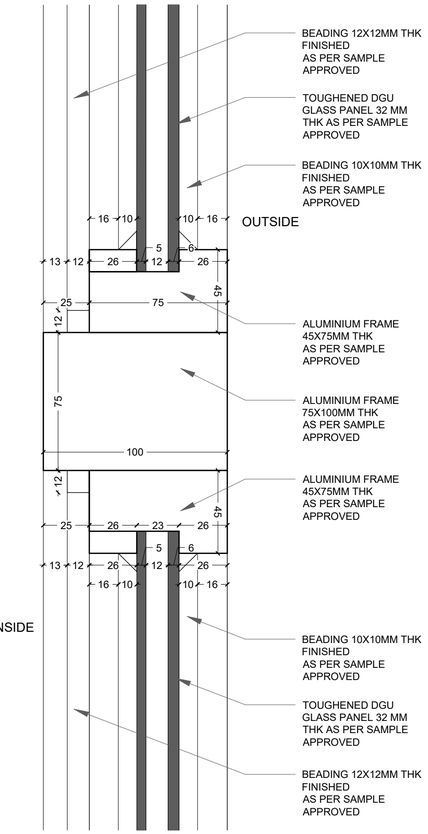

DETAIL G
SCALE 1:2

PLAN AT AA'
SCALE 1:20

DETAIL A
SCALE 1:2

DETAIL B
SCALE 1:2

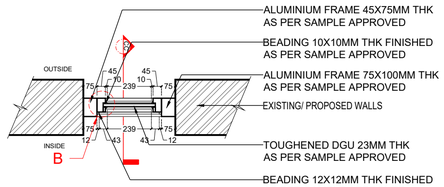

PLAN AT BB'
SCALE 1:20

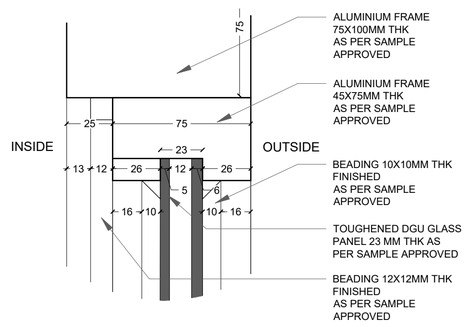

DETAIL E
SCALE 1:2

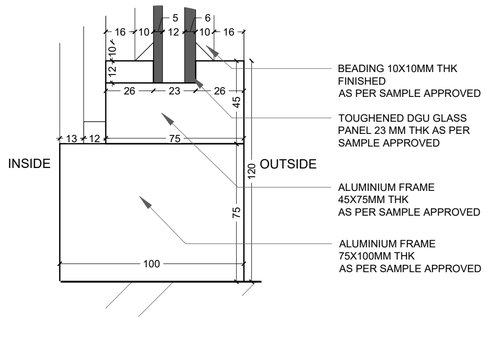

DETAIL F
SCALE 1:2

Notes:
1. Do not scale the drawings. All drawings are to be read and not measured.
2. All dimensions must be checked on site and any discrepancies verified with the architect.
3. This drawing shall be read in conjunction with relevant architectural, structural, and services drawings.
4. Window drawings are for intent only, final windows to be fabricated per approved shop drawings
5. All the windows to be made lockable using Allen Key lock; to be operated only by hotel staff.

© AISHWARYA TIPNIS ARCHITECTS

B. GENERAL ARRANGEMENT (PROPOSED)

TENDER DRAWINGS - DOOR AND WINDOW DETAILS

DOOR WINDOW SCHEDULE

Name	Width (in mm)	Height (in mm)	Sill Level(in mm)	Lintel Level(in mm)
W6	500	1690		

NOTE- THE SHOP DRAWINGS ARE TO BE MADE BY THE VENDOR

Revisions

Rev	Date	Description
R-00		

Consultants

Auditorium

Lighting

MEP

GD-HONORIA COURT
Lawrence School Sanawar

Date 09/10/2026
Drawing No. ATA-LSS-GD-6106
Client LSS
Drawn Sanskriti Garg
Revision R- 00
Checked Vaibhav Jain

Scale 1:20/1:2

Drawing DW SCHEDULE- W6

AISHWARYA TIPNIS ARCHITECTS
83-D, DDA Flats, Masjid Moth Phase II,
Greater Kailash III, New Delhi-110048
T:+ 91-11-29221690 M:91-9873926616
projects@studioata.in
www.studioata.in

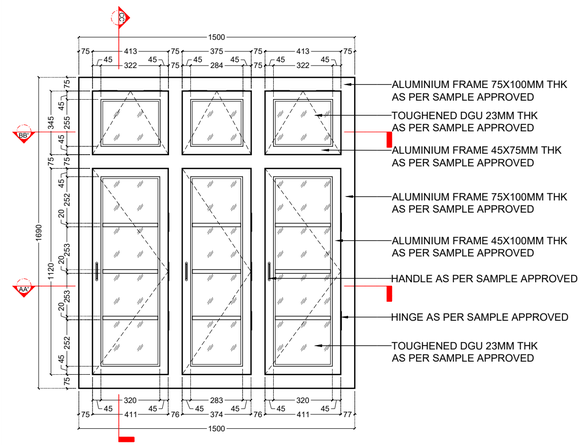

OUTSIDE ELEVATION
SCALE 1:20

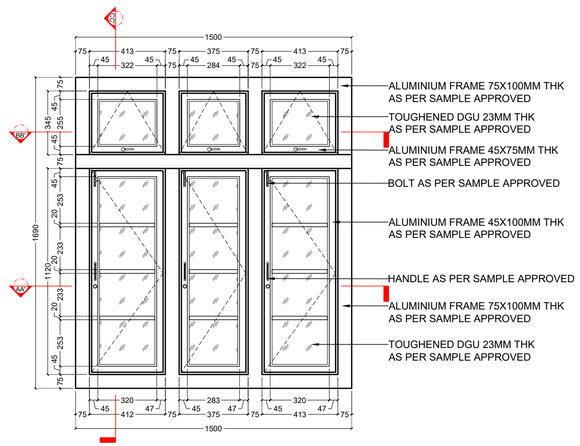

INSIDE ELEVATION
SCALE 1:20

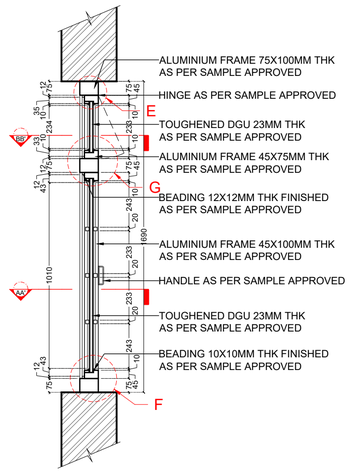

SECTION CC'
SCALE 1:20

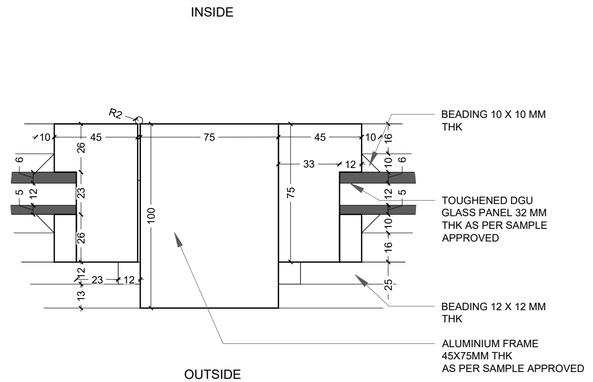

DETAIL B
SCALE 1:2

PLAN AT AA'
SCALE 1:20

DETAIL A
SCALE 1:2

DETAIL C
SCALE 1:2

DETAIL E
SCALE 1:2

DETAIL G
SCALE 1:2

PLAN AT BB'
SCALE 1:20

DETAIL D
SCALE 1:2

DETAIL F
SCALE 1:2

DETAIL G
SCALE 1:2

Notes:
1. Do not scale the drawings. All drawings are to be read and not measured.
2. All dimensions must be checked on site and any discrepancies verified with the architect.
3. This drawing shall be read in conjunction with relevant architectural, structural, and services drawings.
4. Window drawings are for intent only, final windows to be fabricated per approved shop drawings
5. All the windows to be made lockable using Allen Key lock; to be operated only by hotel staff.

© AISHWARYA TIPNIS ARCHITECTS

B. GENERAL ARRANGEMENT (PROPOSED)

TENDER DRAWINGS - DOOR AND WINDOW DETAILS

DOOR WINDOW SCHEDULE

Name	Width (in mm)	Height (in mm)	Sill Level(in mm)	Lintel Level(in mm)
W7	1500	1690	960	2650

NOTE- THE SHOP DRAWINGS ARE TO BE MADE BY THE VENDOR

Revisions

Rev	Date	Description
R- 00		

Consultants

Auditorium

Lighting

MEP

GD-HONORIA COURT
Lawrence School Sanawar

Date
09/10/2026

Drawing No.
ATA-LSS-GD-6107

Client
LSS

Drawn
Sanskriti Garg

Revision
R- 00

Checked
Vaibhav Jain

Scale
1:20/1:2

Drawing
DW SCHEDULE- W7

AISHWARYA TIPNIS ARCHITECTS
83-D, DDA Flats, Masjid Moth Phase II,
Greater Kailash III, New Delhi-110048
T:+ 91-11-29221690 M:91-9873926616
projects@studioata.in
www.studioata.in

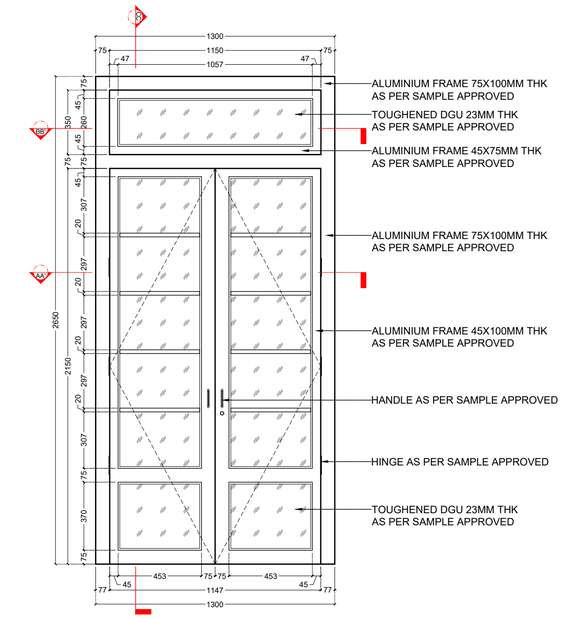

OUTSIDE ELEVATION
SCALE 1:20

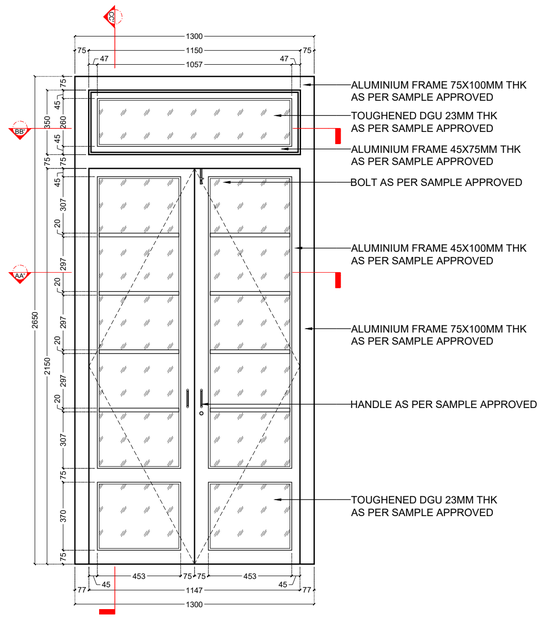

INSIDE ELEVATION
SCALE 1:20

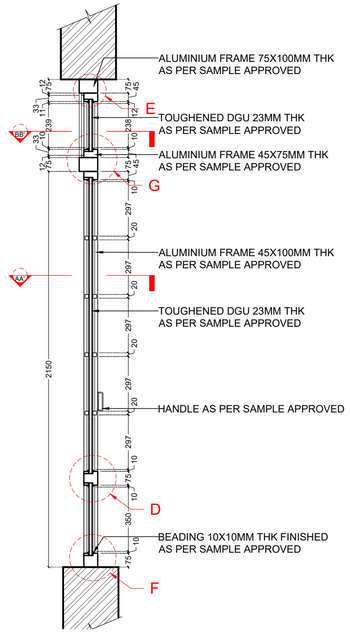

SECTION CC'
SCALE 1:20

INSIDE

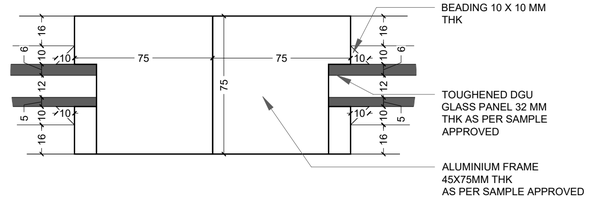

OUTSIDE

DETAIL B
SCALE 1:2

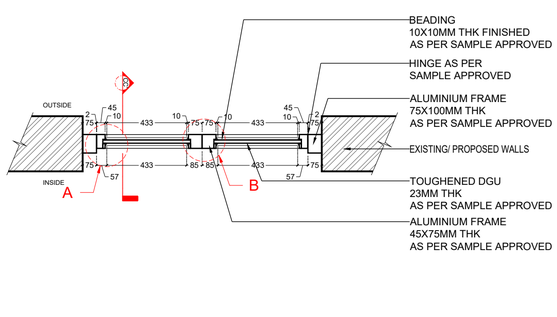

PLAN AT AA'
SCALE 1:20

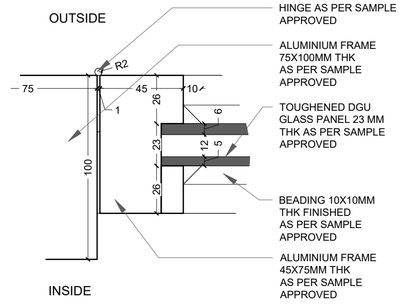

DETAIL A
SCALE 1:2

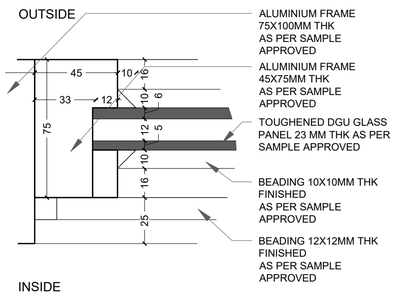

DETAIL C
SCALE 1:2

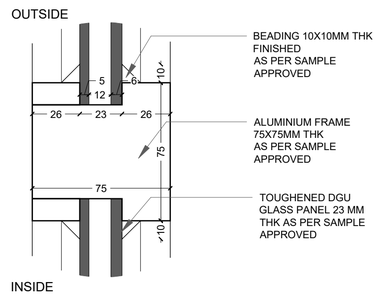

DETAIL D
SCALE 1:2

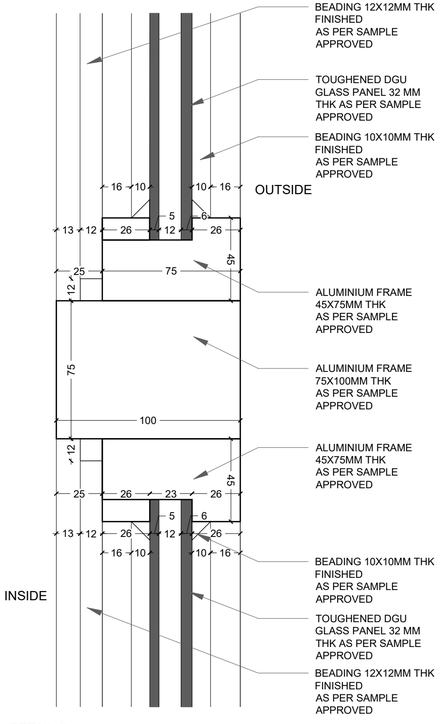

DETAIL G
SCALE 1:2

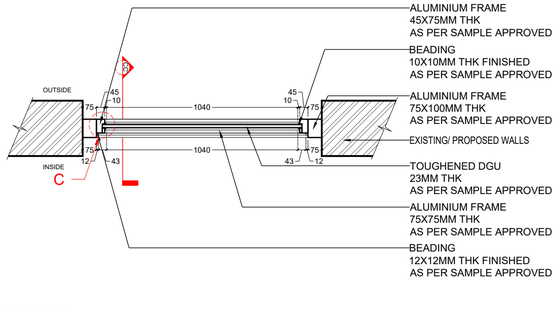

PLAN AT BB'
SCALE 1:20

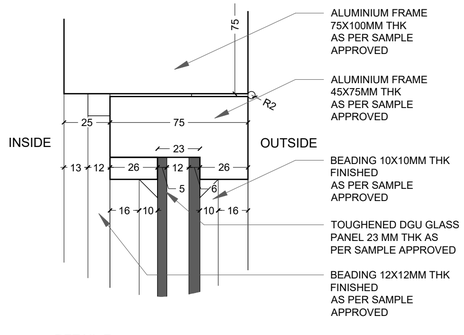

DETAIL E
SCALE 1:2

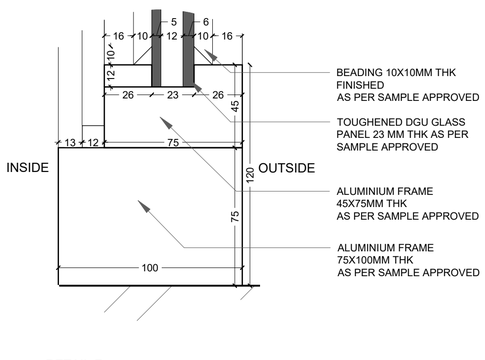

DETAIL F
SCALE 1:2

Notes:
1. Do not scale the drawings. All drawings are to be read and not measured.
2. All dimensions must be checked on site and any discrepancies verified with the architect.
3. This drawing shall be read in conjunction with relevant architectural, structural, and services drawings.
4. Window drawings are for intent only, final windows to be fabricated per approved shop drawings
5. All the windows to be made lockable using Allen Key lock; to be operated only by hotel staff.

© AISHWARYA TIPNIS ARCHITECTS

B. GENERAL ARRANGEMENT (PROPOSED)

TENDER DRAWINGS - DOOR AND WINDOW DETAILS

DOOR WINDOW SCHEDULE

Name	Width (in mm)	Height (in mm)	Sill Level(in mm)	Lintel Level(in mm)
D1	1300	2650		2800

NOTE- THE SHOP DRAWINGS ARE TO BE MADE BY THE VENDOR

Revisions

Rev	Date	Description
R-00		

Consultants

Auditorium

Lighting

MEP

GD-HONORIA COURT
Lawrence School Sanawar

Date 09/10/2026
Drawing No. ATA-LSS-GD-6108
Client LSS
Drawn Sanskriti Garg
Revision R- 00
Checked Vaibhav Jain

Scale 1:20/1:2

Drawing
DW SCHEDULE- D1

AISHWARYA TIPNIS ARCHITECTS
AISHWARYA TIPNIS ARCHITECTS
83-D, DDA Flats, Masjid Moth Phase II,
Greater Kailash III, New Delhi-110048
T:+ 91-11-29221690 M:91-9873926616
projects@studioata.in
www.studioata.in

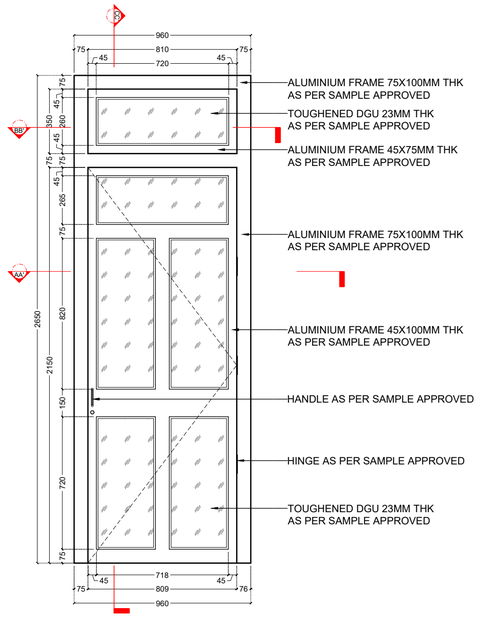

OUTSIDE ELEVATION
SCALE 1:20

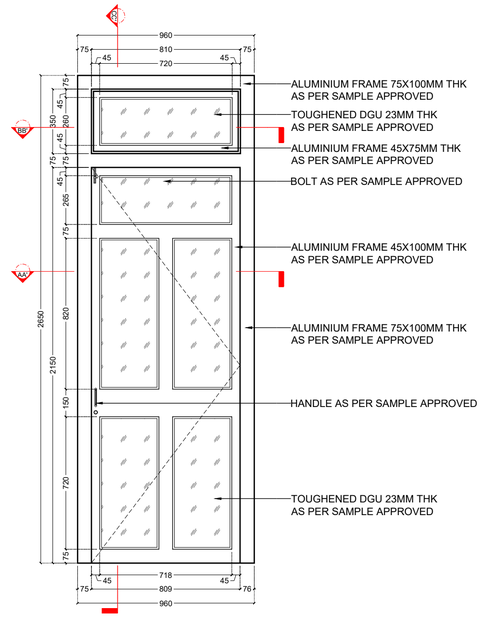

INSIDE ELEVATION
SCALE 1:20

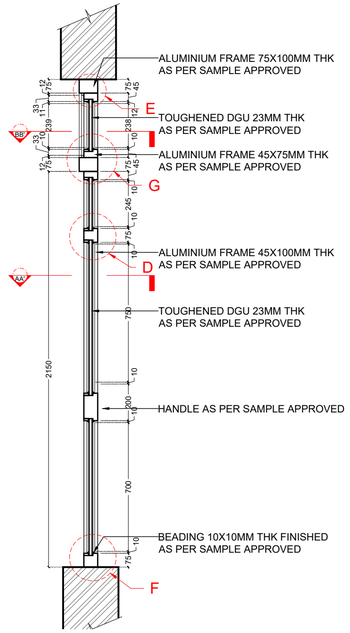

SECTION CC'
SCALE 1:20

INSIDE

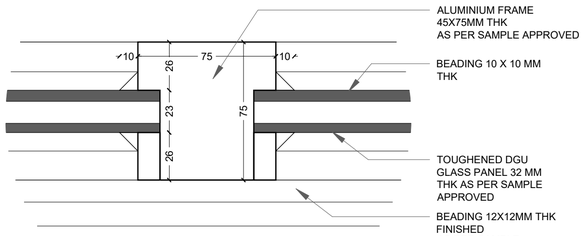

OUTSIDE

DETAIL B
SCALE 1:2

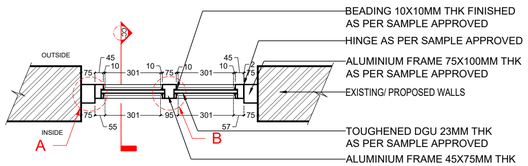

PLAN AT AA'
SCALE 1:20

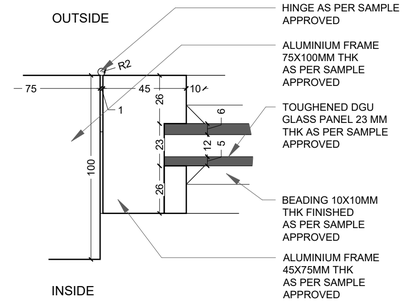

DETAIL A
SCALE 1:2

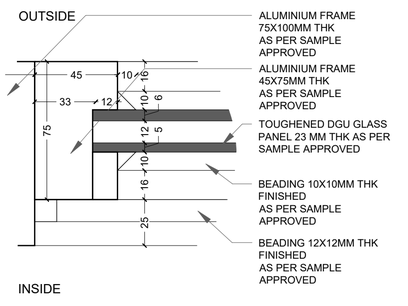

DETAIL C
SCALE 1:2

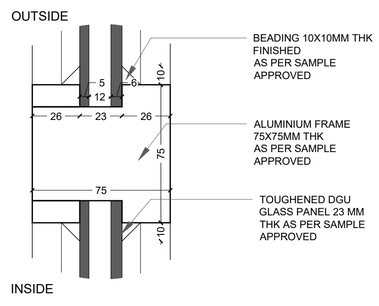

DETAIL D
SCALE 1:2

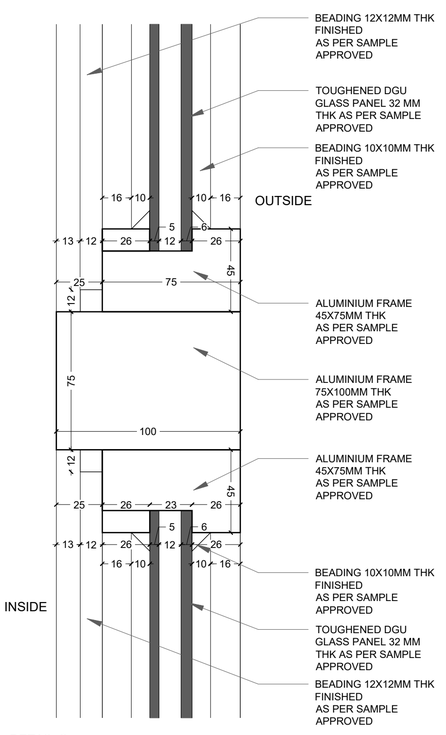

DETAIL G
SCALE 1:2

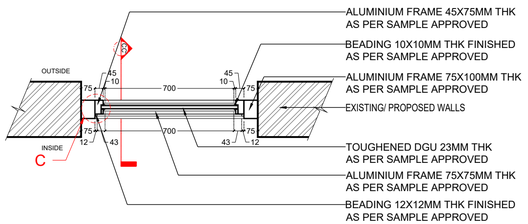

PLAN AT BB'
SCALE 1:20

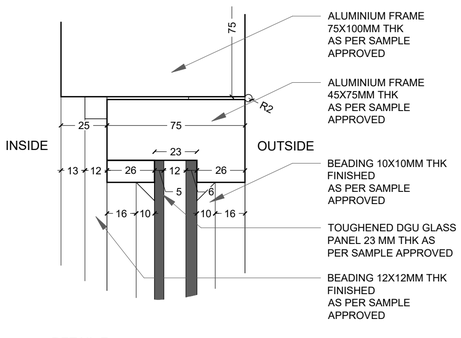

DETAIL E
SCALE 1:2

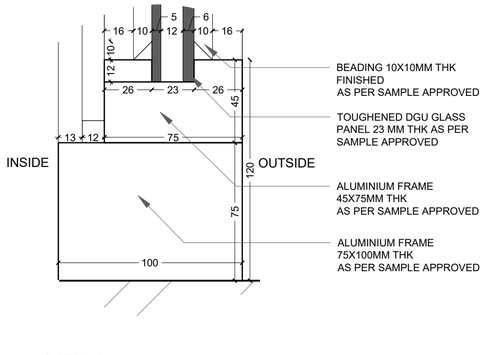

DETAIL F
SCALE 1:2

Notes:
1. Do not scale the drawings. All drawings are to be read and not measured.
2. All dimensions must be checked on site and any discrepancies verified with the architect.
3. This drawing shall be read in conjunction with relevant architectural, structural, and services drawings.
4. Window drawings are for intent only, final windows to be fabricated per approved shop drawings
5. All the windows to be made lockable using Allen Key lock; to be operated only by hotel staff.

© AISHWARYA TIPNIS ARCHITECTS

B. GENERAL ARRANGEMENT (PROPOSED)

TENDER DRAWINGS - DOOR AND WINDOW DETAILS

DOOR WINDOW SCHEDULE

Name	Width (in mm)	Height (in mm)	Sill Level(in mm)	Lintel Level(in mm)
D2	960	2650		2650

NOTE- THE SHOP DRAWINGS ARE TO BE MADE BY THE VENDOR

Revisions

Rev	Date	Description
R-00		

Consultants

Auditorium

Lighting

MEP

GD-HONORIA COURT
Lawrence School Sanawar

Date 09/10/2026
Drawing No. ATA-LSS-GD-6109
Client LSS
Drawn Sanskriti Garg
Revision R- 00
Checked Vaibhav Jain

Scale 1:20/1:2

Drawing DW SCHEDULE- D2

AISHWARYA TIPNIS ARCHITECTS
83-D, DDA Flats, Masjid Moth Phase II,
Greater Kailash III, New Delhi-110048
T:+ 91-11-29221690 M:91-9873926616
projects@studioata.in
www.studioata.in

Door Window Schedule - First Floor Level					
Windows					
Name	Width (in mm)	Height (in mm)	Sill Level(in mm)	Lintel Level(in mm)	No. of items
W1	980	1690	960	2650	57
W2	540	1690	960	2650	5
W2A	540	1220	960	2180	1
W3	1200	1050	900	1950	2
W3A	1200	1050	1420	2470	8
W4	1030	1690			4
W5	_	_	_	_	_
W6	500	1690			1
W7	1500	1690	960	2650	2
W8	880	1690	960	2650	1
TOTAL					81
Doors					
D1	1300	2650	_	2650	7
D2	960	2650	_	2650	6
D3	1050	2650	_	2650	3
D4	750	2650	_	2650	1
TOTAL					17

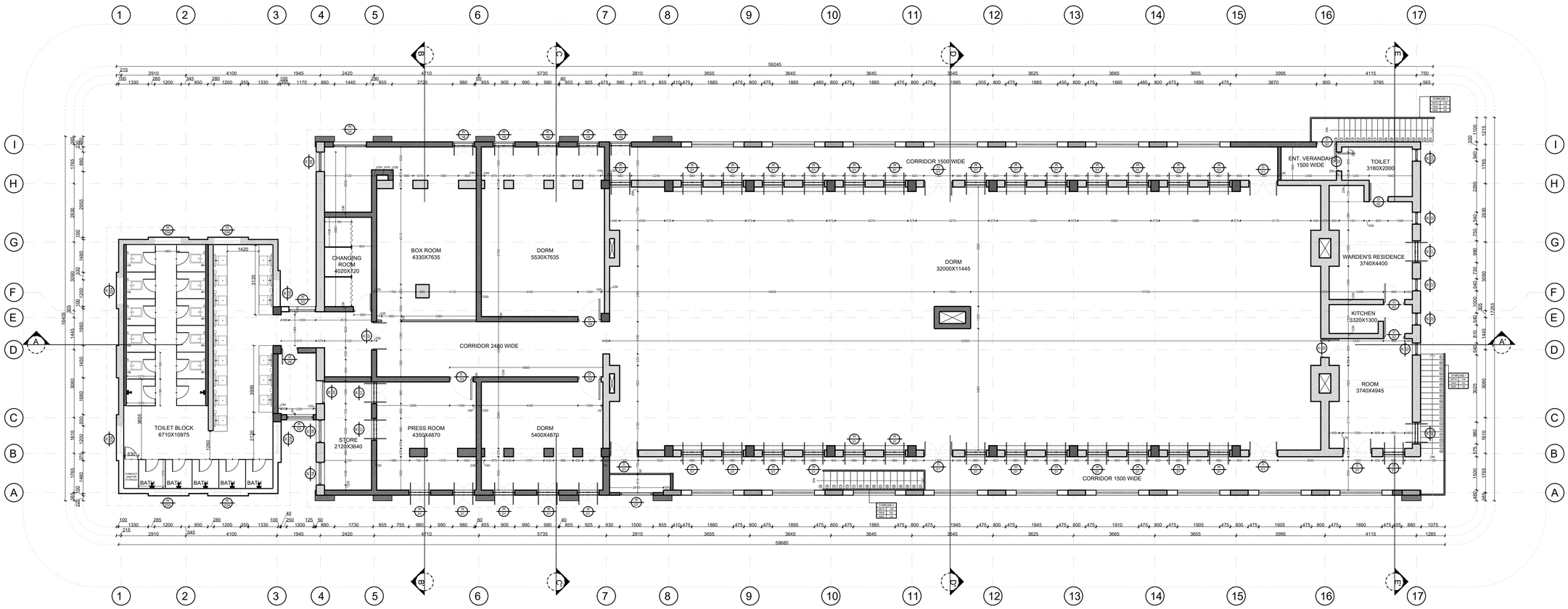

Notes:
1. Do not scale the drawings.
2. All dimensions must be checked on site and any discrepancies verified with the architect.
3. This drawing shall be read in conjunction with relevant architectural, structural, and services drawings.

© AISHWARYA TIPNIS ARCHITECTS

DRAFT FOR REVIEW

Revisions

Rev	Date	Description
R-	dd/mm/yyyy	

Consultants

Auditorium

Lighting

MEP

GD-HONORIA COURT
Lawrence School Sanawar

Date 08/10/2026
Drawing No. ATA-LSS-GD-1101
Client LSS
Drawn Amala Babu
Revision R-
Checked Vaibhav Jain

Scale 1:100@A1

Drawing
Landscape Plan

AISHWARYA TIPNIS ARCHITECTS
83-D, DDA Flats, Masjid Moth Phase II,
Greater Kailash III, New Delhi-110048
T:+ 91-11-29221690 M:91-9873926616
projects@studioata.in
www.studioata.in

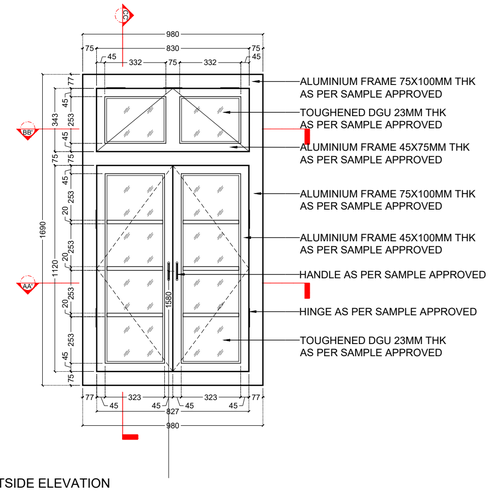

OUTSIDE ELEVATION
SCALE 1:20

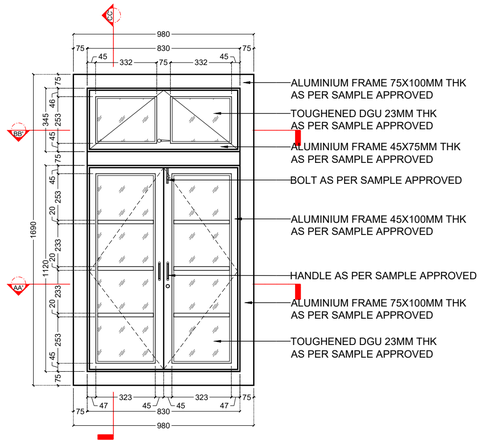

INSIDE ELEVATION
SCALE 1:20

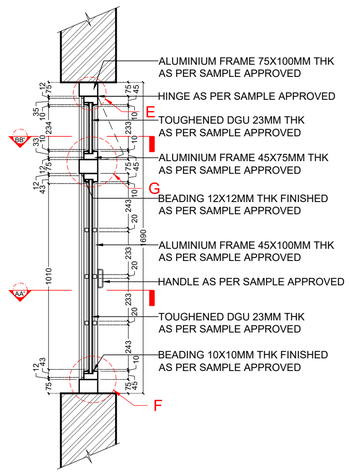

SECTION CC'
SCALE 1:20

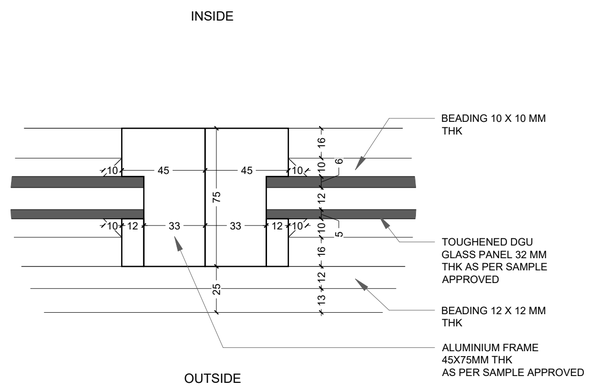

DETAIL B
SCALE 1:2

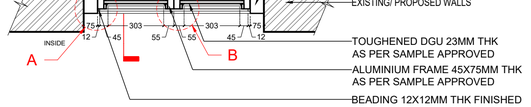

PLAN AT AA'
SCALE 1:20

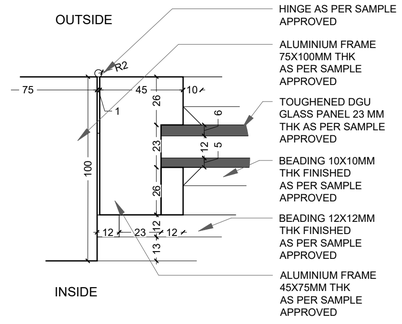

DETAIL A
SCALE 1:2

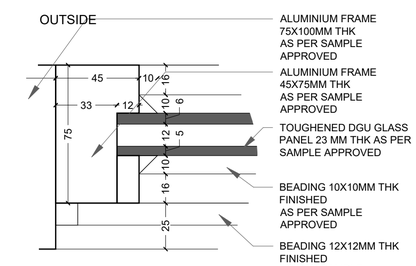

DETAIL C
SCALE 1:2

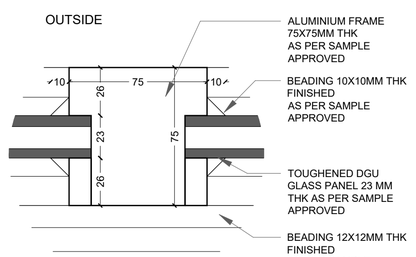

DETAIL D
SCALE 1:2

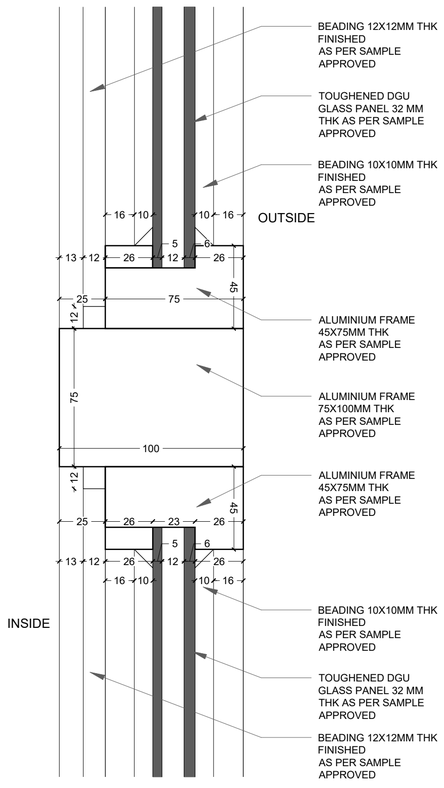

DETAIL G
SCALE 1:2

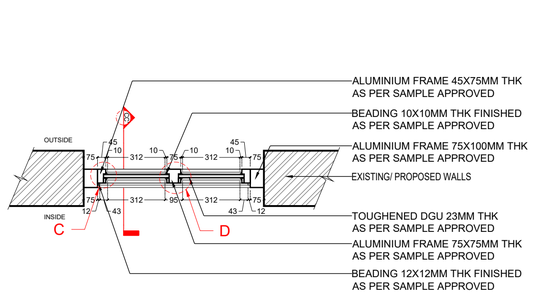

PLAN AT BB'
SCALE 1:20

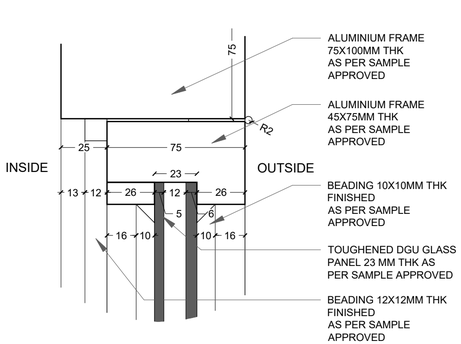

DETAIL E
SCALE 1:2

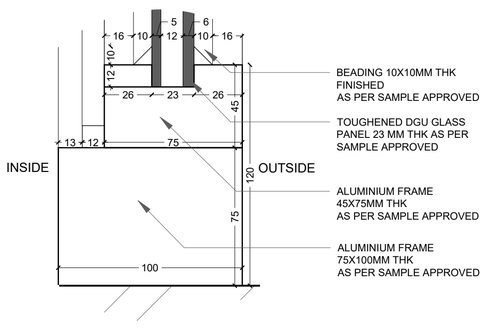

DETAIL F
SCALE 1:2

Notes:
1. Do not scale the drawings. All drawings are to be read and not measured.
2. All dimensions must be checked on site and any discrepancies verified with the architect.
3. This drawing shall be read in conjunction with relevant architectural, structural, and services drawings.
4. Window drawings are for intent only, final windows to be fabricated per approved shop drawings
5. All the windows to be made lockable using Allen Key lock; to be operated only by hotel staff.

© AISHWARYA TIPNIS ARCHITECTS

B. GENERAL ARRANGEMENT (PROPOSED)

TENDER DRAWINGS - DOOR AND WINDOW DETAILS

DOOR WINDOW SCHEDULE

Name	Width (in mm)	Height (in mm)	Sill Level(in mm)	Lintel Level(in mm)
W1	980	1690	960	2650

NOTE- THE SHOP DRAWINGS ARE TO BE MADE BY THE VENDOR

Revisions

Rev	Date	Description
R-00		

Consultants

Auditorium

Lighting

MEP

GD-HONORIA COURT
Lawrence School Sanawar

Date 09/10/2026
Drawing No. ATA-LSS-GD-6112
Client LSS
Drawn Sanskriti Garg
Revision R- 00
Checked Vaibhav Jain

Scale 1:20/1:2

Drawing
DW SCHEDULE- W1

AISHWARYA TIPNIS ARCHITECTS
83-D, DDA Flats, Masjid Moth Phase II,
Greater Kailash III, New Delhi-110048
T:+ 91-11-29221690 M:91-9873926616
projects@studioata.in
www.studioata.in

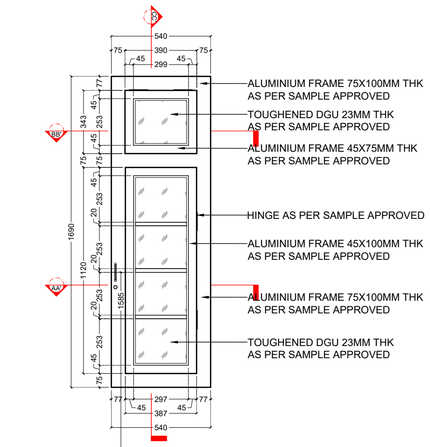

OUTSIDE ELEVATION
SCALE 1:20

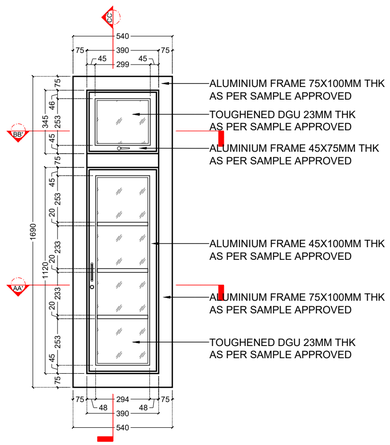

INSIDE ELEVATION
SCALE 1:20

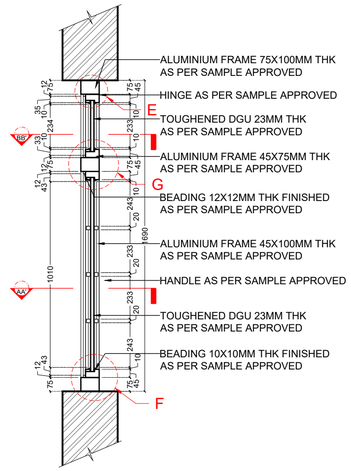

SECTION CC'
SCALE 1:20

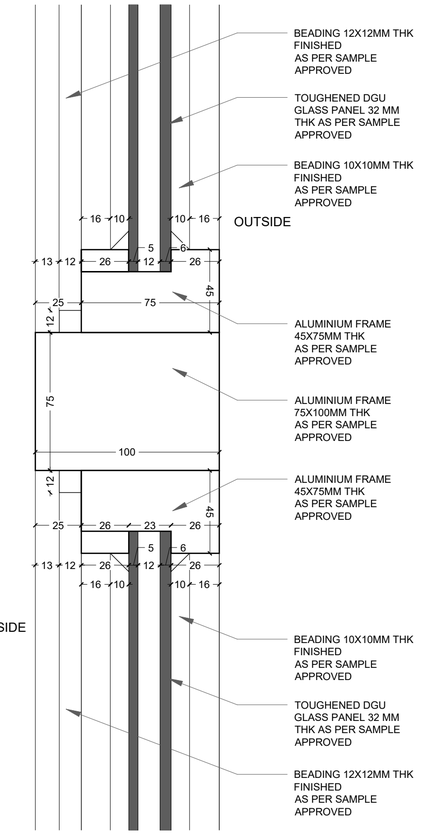

DETAIL G
SCALE 1:2

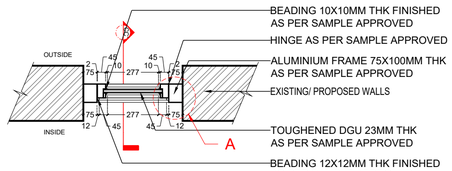

PLAN AT AA'
SCALE 1:20

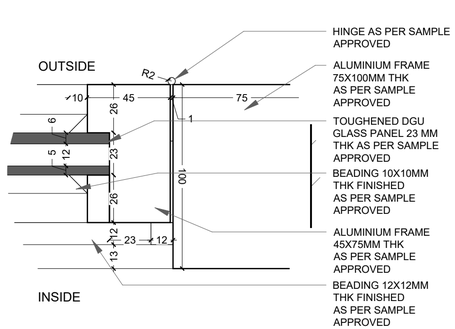

DETAIL A
SCALE 1:2

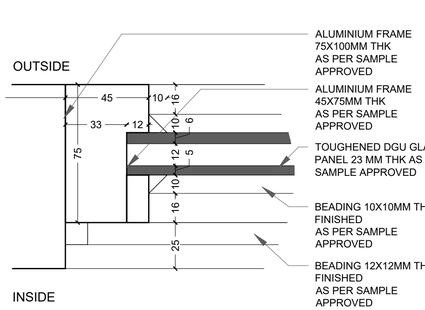

DETAIL B
SCALE 1:2

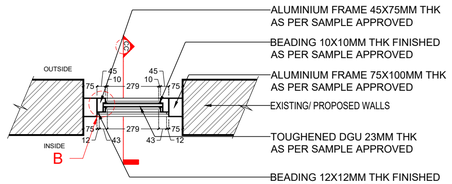

PLAN AT BB'
SCALE 1:20

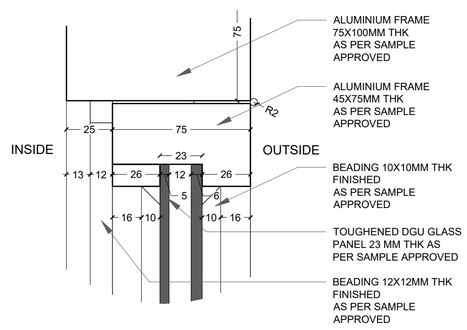

DETAIL E
SCALE 1:2

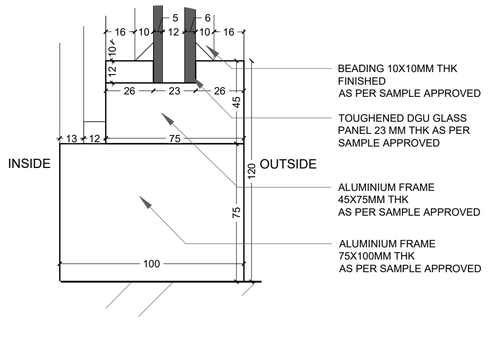

DETAIL F
SCALE 1:2

Notes:
1. Do not scale the drawings. All drawings are to be read and not measured.
2. All dimensions must be checked on site and any discrepancies verified with the architect.
3. This drawing shall be read in conjunction with relevant architectural, structural, and services drawings.
4. Window drawings are for intent only, final windows to be fabricated per approved shop drawings
5. All the windows to be made lockable using Allen Key lock; to be operated only by hotel staff.

© AISHWARYA TIPNIS ARCHITECTS

B. GENERAL ARRANGEMENT (PROPOSED)

TENDER DRAWINGS - DOOR AND WINDOW DETAILS

DOOR WINDOW SCHEDULE

Name	Width (in mm)	Height (in mm)	Sill Level(in mm)	Lintel Level(in mm)
W2	540	1690	900	2600

NOTE- THE SHOP DRAWINGS ARE TO BE MADE BY THE VENDOR

Revisions

Rev	Date	Description
R-00		

Consultants

Auditorium

Lighting

MEP

GD-HONORIA COURT
Lawrence School Sanawar

Date 09/10/2026
Drawing No. ATA-LSS-GD-6113
Client LSS
Drawn Sanskriti Garg
Revision R- 00
Checked Vaibhav Jain

Scale 1:20/1:2

Drawing DW SCHEDULE- W2

AISHWARYA TIPNIS ARCHITECTS
83-D, DDA Flats, Masjid Moth Phase II,
Greater Kailash III, New Delhi-110048
T:+ 91-11-29221690 M:91-9873926616
projects@studioata.in
www.studioata.in

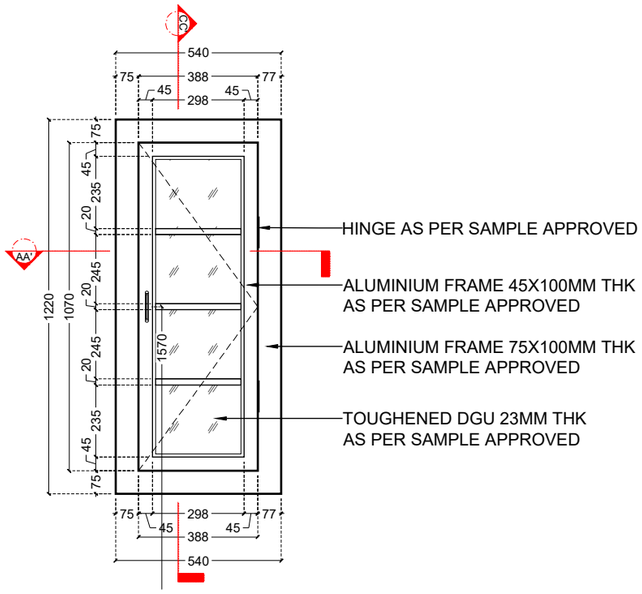

OUTSIDE ELEVATION
SCALE 1:20

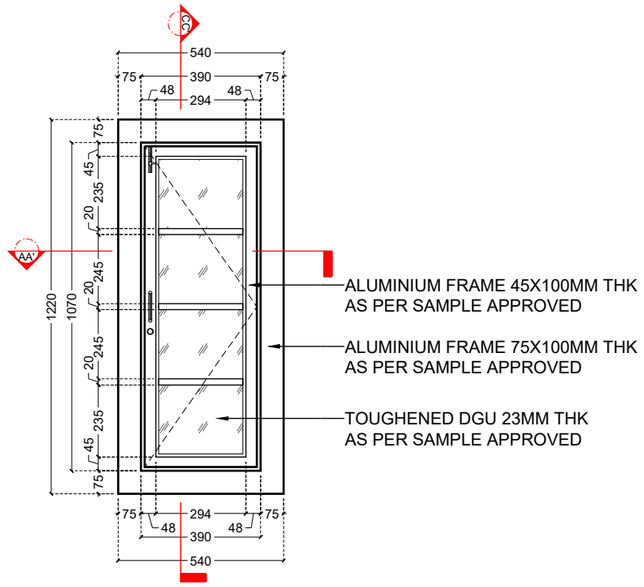

INSIDE ELEVATION
SCALE 1:20

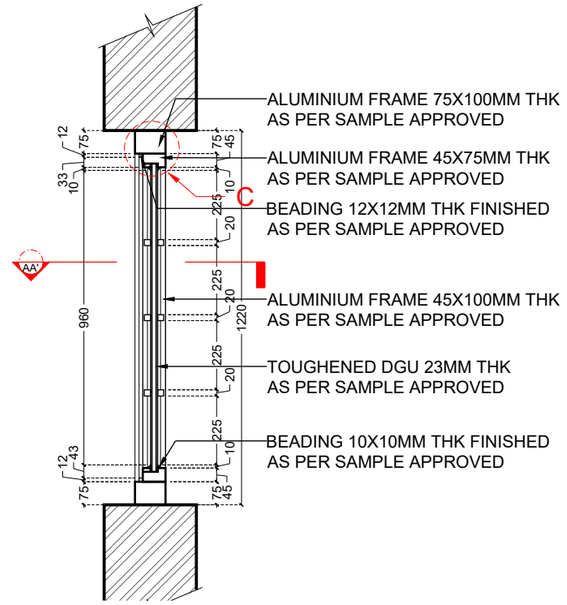

SECTION BB'
SCALE 1:20

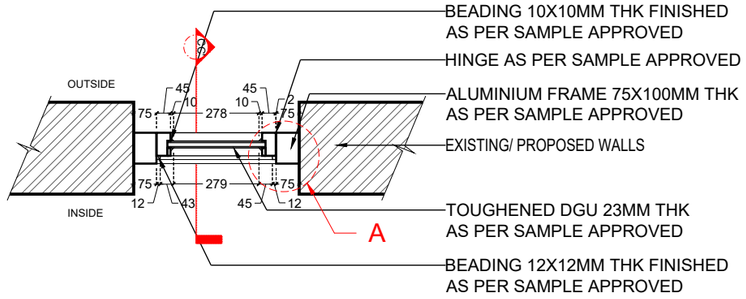

PLAN AT AA'
SCALE 1:20

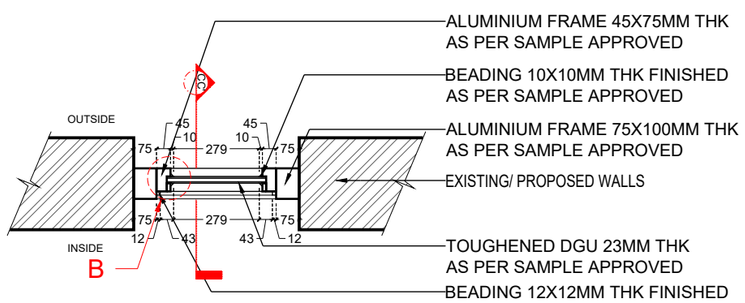

PLAN AT BB'
SCALE 1:20

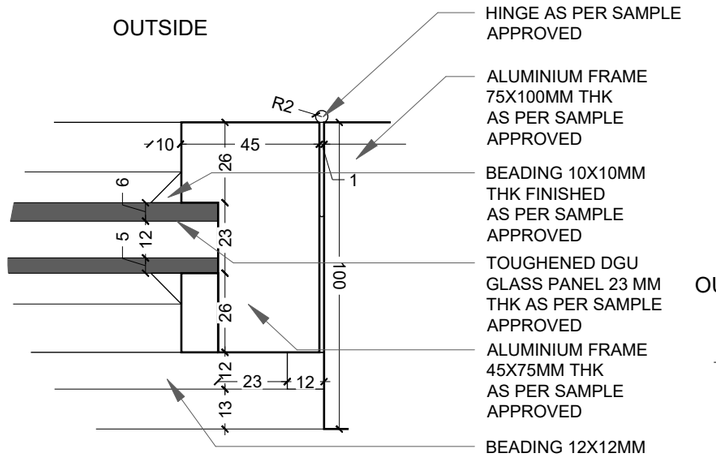

DETAIL A
SCALE 1:2

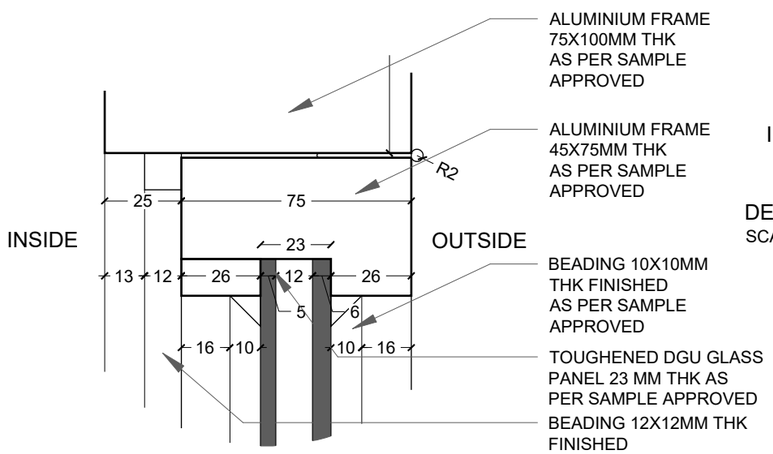

DETAIL C
SCALE 1:2

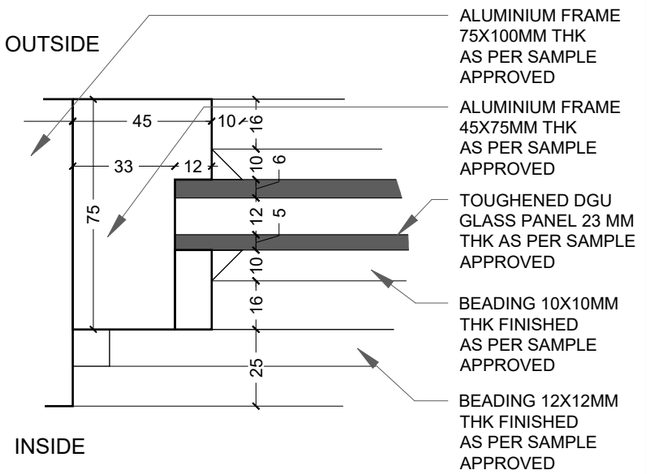

DETAIL B
SCALE 1:2

Notes:
1. Do not scale the drawings. All drawings are to be read and not measured.
2. All dimensions must be checked on site and any discrepancies verified with the architect.
3. This drawing shall be read in conjunction with relevant architectural, structural, and services drawings.
4. Window drawings are for intent only, final windows to be fabricated per approved shop drawings
5. All the windows to be made lockable using Allen Key lock; to be operated only by hotel staff.

© AISHWARYA TIPNIS ARCHITECTS

B. GENERAL ARRANGEMENT (PROPOSED)

TENDER DRAWINGS - DOOR AND WINDOW DETAILS

DOOR WINDOW SCHEDULE

Name	Width (in mm)	Height (in mm)	Sill Level(in mm)	Lintel Level(in mm)
W2A	540	1220	960	2180

NOTE- THE SHOP DRAWINGS ARE TO BE MADE BY THE VENDOR

Revisions

Rev	Date	Description
R- 00		

Consultants

Auditorium

Lighting

MEP

GD-HONORIA COURT
Lawrence School Sanawar

Date 09/10/2026
Drawing No. ATA-LSS-GD-6114
Client LSS
Drawn Sanskriti Garg
Revision R- 00
Checked Vaibhav Jain

Scale 1:20/1:2

Drawing DW SCHEDULE- W2A

AISHWARYA TIPNIS ARCHITECTS
83-D, DDA Flats, Masjid Moth Phase II,
Greater Kailash III, New Delhi-110048
T:+ 91-11-29221690 M:91-9873926616
projects@studioata.in
www.studioata.in

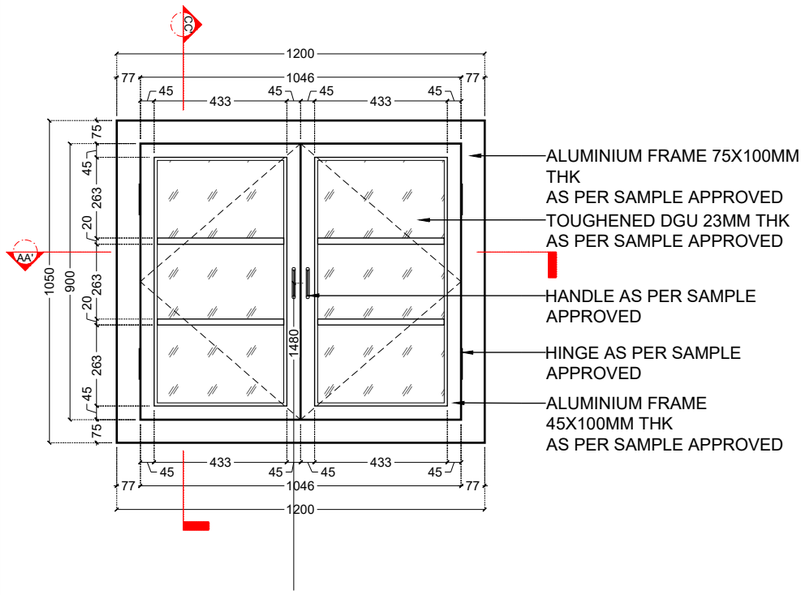

OUTSIDE ELEVATION
SCALE 1:20

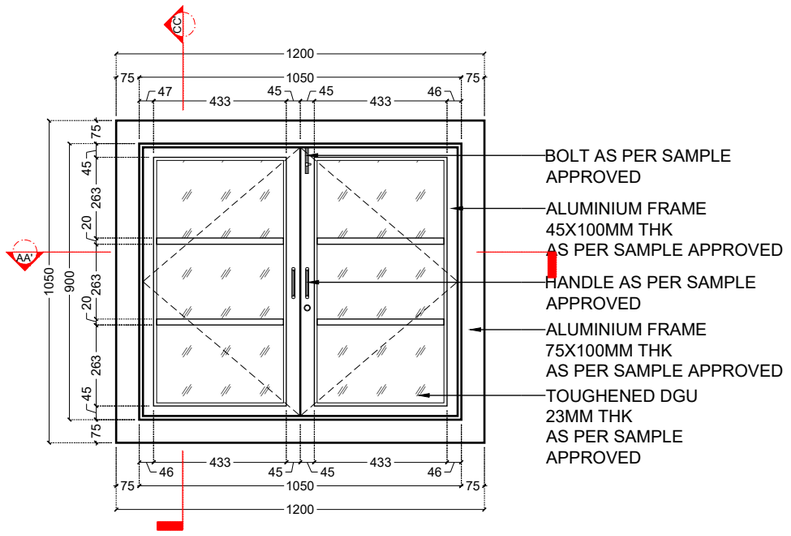

INSIDE ELEVATION
SCALE 1:20

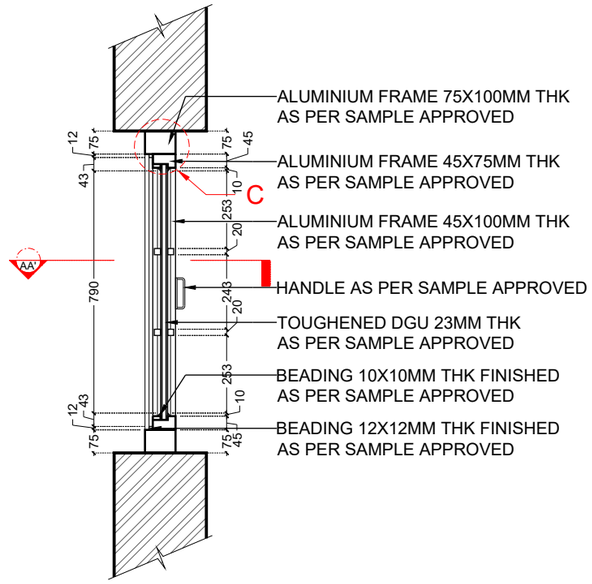

SECTION BB'
SCALE 1:20

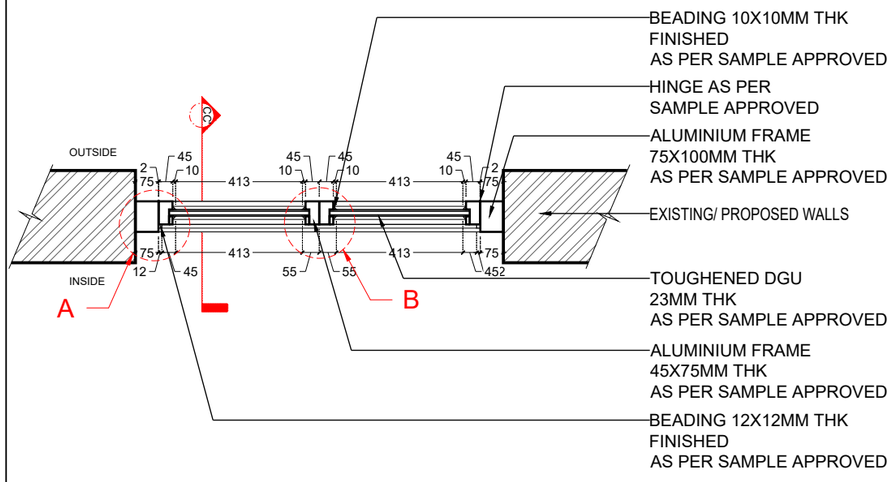

PLAN AT AA' (SHUTTER WINDOW)
SCALE 1:20

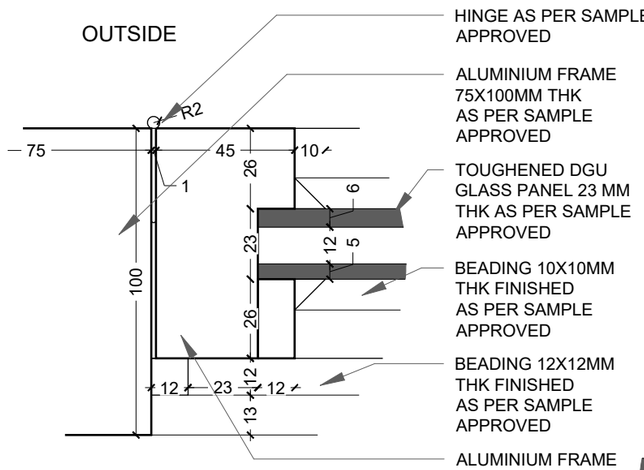

DETAIL A
SCALE 1:2

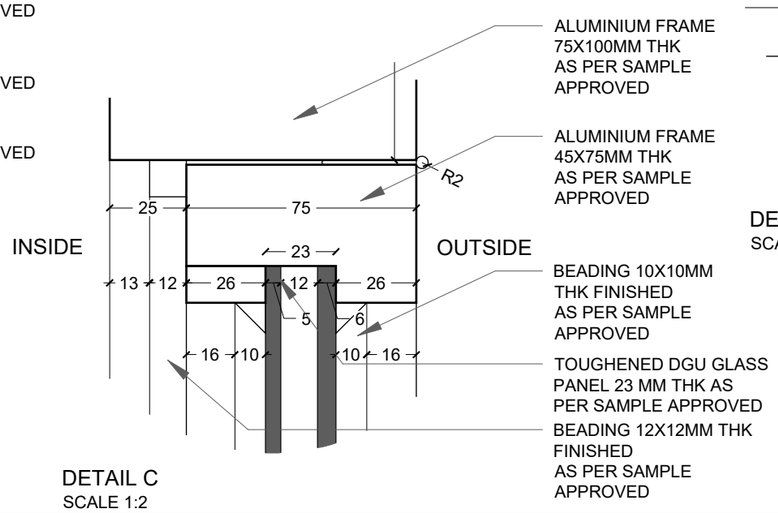

DETAIL C
SCALE 1:2

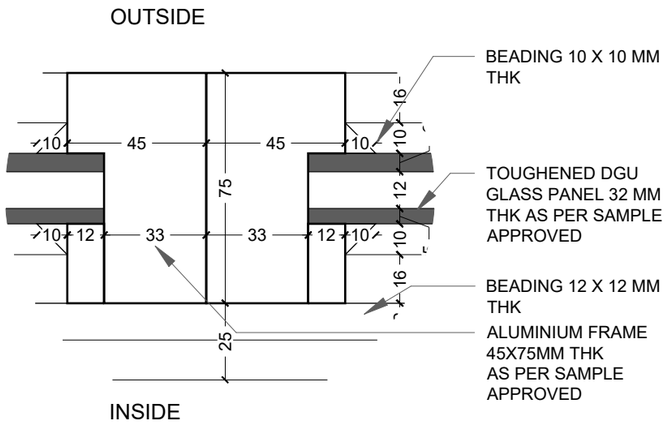

DETAIL B
SCALE 1:2

Notes:
1. Do not scale the drawings. All drawings are to be read and not measured.
2. All dimensions must be checked on site and any discrepancies verified with the architect.
3. This drawing shall be read in conjunction with relevant architectural, structural, and services drawings.
4. Window drawings are for intent only, final windows to be fabricated per approved shop drawings
5. All the windows to be made lockable using Allen Key lock; to be operated only by hotel staff.

© AISHWARYA TIPNIS ARCHITECTS

B. GENERAL ARRANGEMENT (PROPOSED)

TENDER DRAWINGS - DOOR AND WINDOW DETAILS

DOOR WINDOW SCHEDULE

Name	Width (in mm)	Height (in mm)	Sill Level(in mm)	Lintel Level(in mm)
W3	1200	1050	900	1950

NOTE- THE SHOP DRAWINGS ARE TO BE MADE BY THE VENDOR

Revisions

Rev	Date	Description
R- 00		

Consultants

Auditorium

Lighting

MEP

GD-HONORIA COURT
Lawrence School Sanawar

Date 09/10/2026
Drawing No. ATA-LSS-GD-6115
Client LSS
Drawn Sanskriti Garg
Revision R- 00
Checked Vaibhav Jain

Scale 1:20/1:2

Drawing DW SCHEDULE- W3

AISHWARYA TIPNIS ARCHITECTS
83-D, DDA Flats, Masjid Moth Phase II,
Greater Kailash III, New Delhi-110048
T:+ 91-11-29221690 M:91-9873926616
projects@studioata.in
www.studioata.in

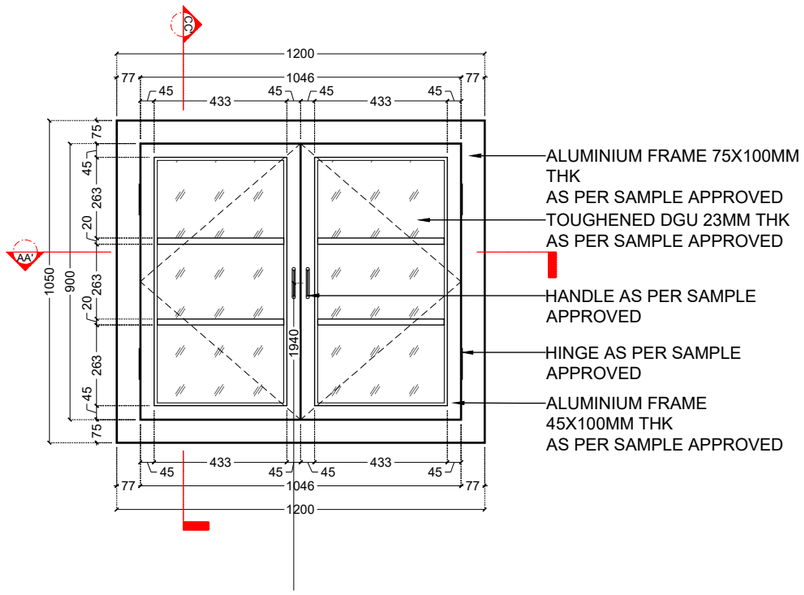

OUTSIDE ELEVATION
SCALE 1:20

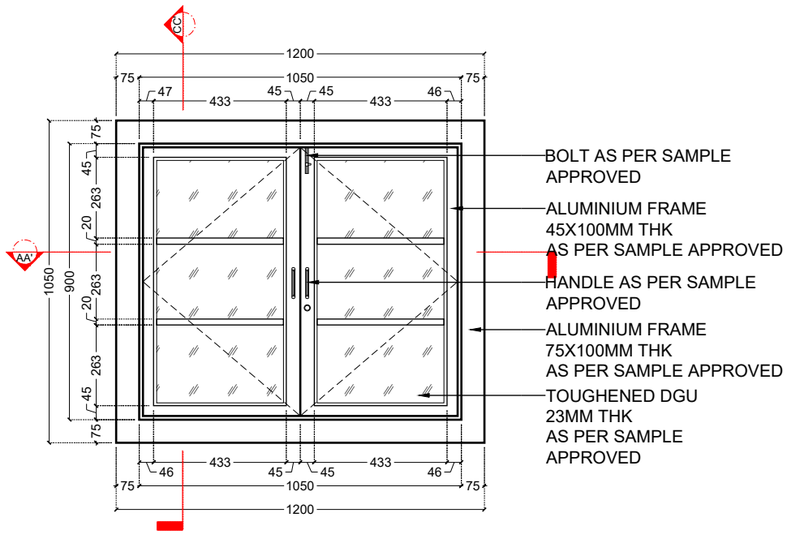

INSIDE ELEVATION
SCALE 1:20

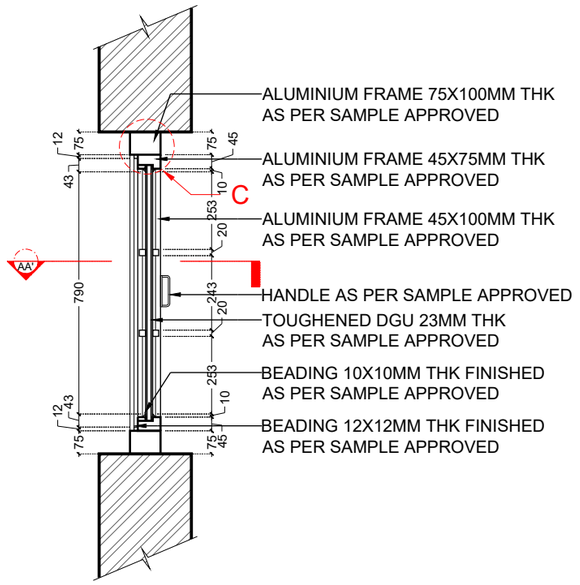

SECTION BB'
SCALE 1:20

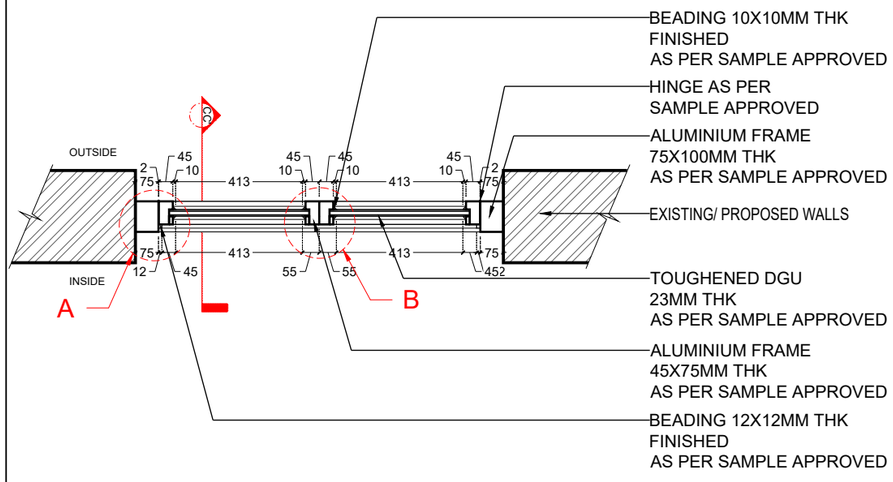

PLAN AT AA' (SHUTTER WINDOW)
SCALE 1:20

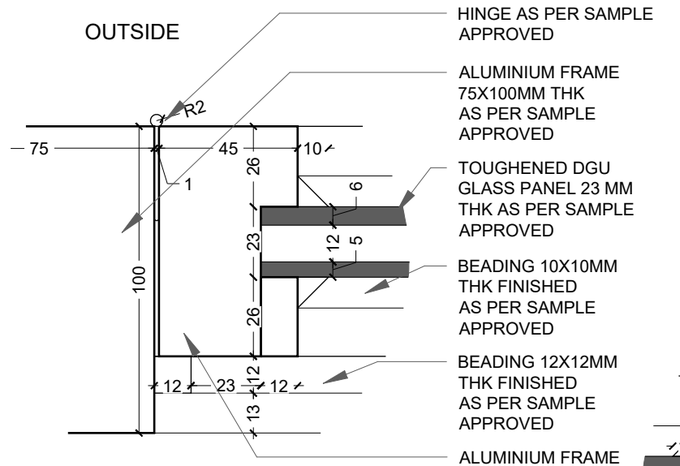

DETAIL A
SCALE 1:2

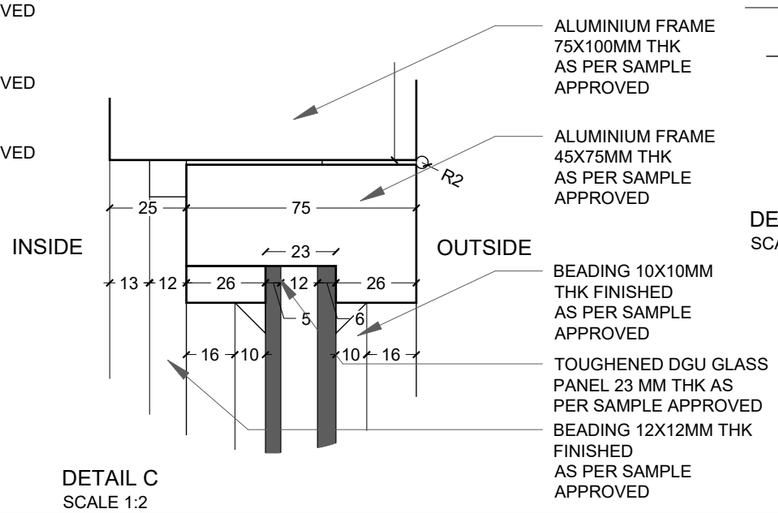

DETAIL C
SCALE 1:2

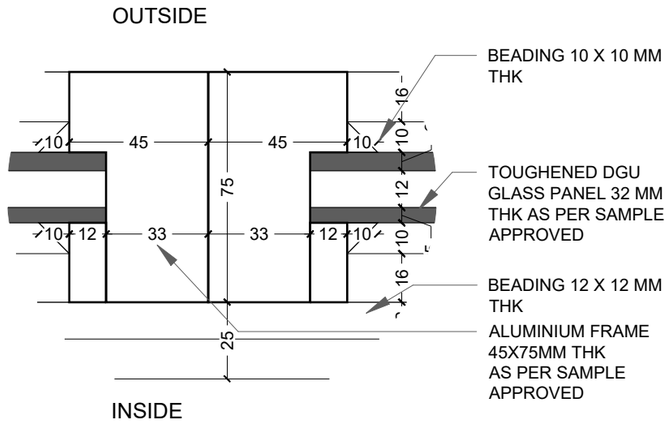

DETAIL B
SCALE 1:2

Notes:
1. Do not scale the drawings. All drawings are to be read and not measured.
2. All dimensions must be checked on site and any discrepancies verified with the architect.
3. This drawing shall be read in conjunction with relevant architectural, structural, and services drawings.
4. Window drawings are for intent only, final windows to be fabricated per approved shop drawings
5. All the windows to be made lockable using Allen Key lock; to be operated only by hotel staff.

© AISHWARYA TIPNIS ARCHITECTS

B. GENERAL ARRANGEMENT (PROPOSED)

TENDER DRAWINGS - DOOR AND WINDOW DETAILS

DOOR WINDOW SCHEDULE

Name	Width (in mm)	Height (in mm)	Sill Level(in mm)	Lintel Level(in mm)
W3A	1200	1050	1420	2470

NOTE- THE SHOP DRAWINGS ARE TO BE MADE BY THE VENDOR

Revisions

Rev	Date	Description
R- 00		

Consultants

Auditorium

Lighting

MEP

GD-HONORIA COURT
Lawrence School Sanawar

Date 09/10/2026
Drawing No. ATA-LSS-GD-6116
Client LSS
Drawn Sanskriti Garg
Revision R- 00
Checked Vaibhav Jain

Scale 1:20/1:2

Drawing DW SCHEDULE- W3A

AISHWARYA TIPNIS ARCHITECTS
83-D, DDA Flats, Masjid Moth Phase II,
Greater Kailash III, New Delhi-110048
T:+ 91-11-29221690 M:91-9873926616
projects@studioata.in
www.studioata.in

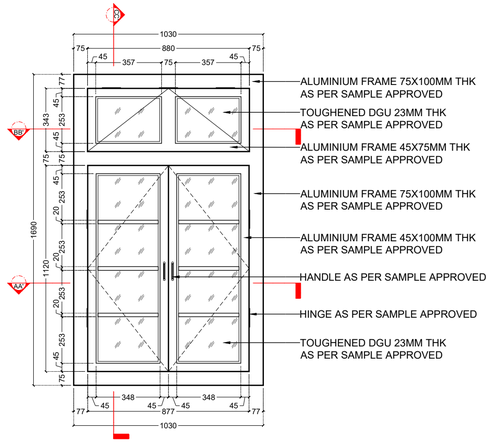

OUTSIDE ELEVATION
SCALE 1:20

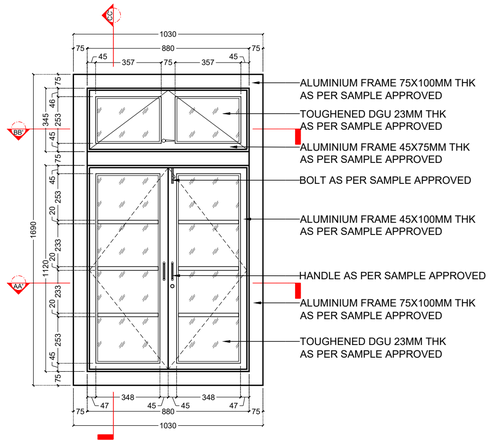

INSIDE ELEVATION
SCALE 1:20

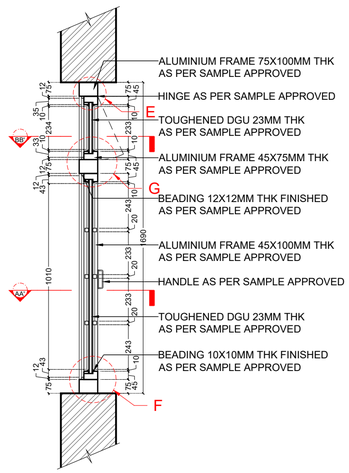

SECTION CC'
SCALE 1:20

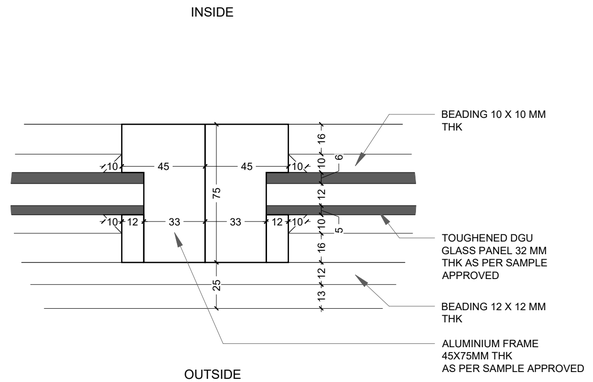

DETAIL B
SCALE 1:2

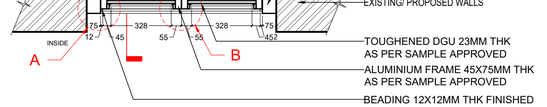

PLAN AT AA'
SCALE 1:20

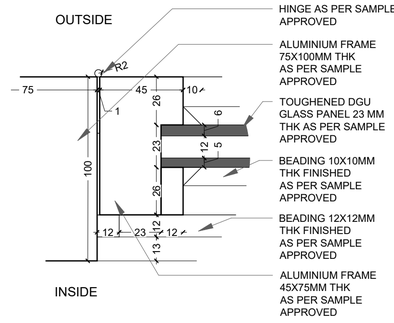

DETAIL A
SCALE 1:2

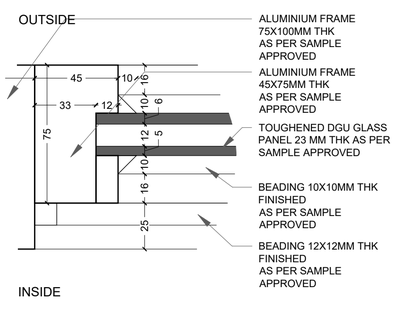

DETAIL C
SCALE 1:2

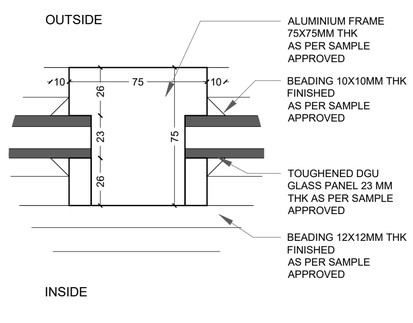

DETAIL D
SCALE 1:2

PLAN AT BB'
SCALE 1:20

DETAIL E
SCALE 1:2

DETAIL F
SCALE 1:2

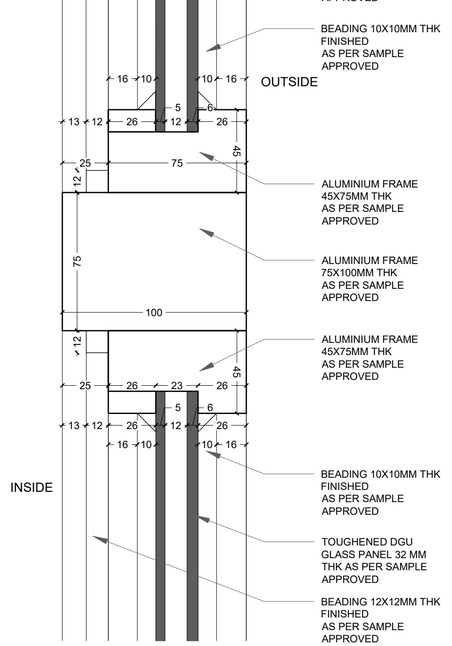

DETAIL G
SCALE 1:2

Notes:
1. Do not scale the drawings. All drawings are to be read and not measured.
2. All dimensions must be checked on site and any discrepancies verified with the architect.
3. This drawing shall be read in conjunction with relevant architectural, structural, and services drawings.
4. Window drawings are for intent only, final windows to be fabricated per approved shop drawings
5. All the windows to be made lockable using Allen Key lock; to be operated only by hotel staff.

© AISHWARYA TIPNIS ARCHITECTS

B. GENERAL ARRANGEMENT (PROPOSED)

TENDER DRAWINGS - DOOR AND WINDOW DETAILS

DOOR WINDOW SCHEDULE

Name	Width (in mm)	Height (in mm)	Sill Level(in mm)	Lintel Level(in mm)
W4	1030	1690		

NOTE- THE SHOP DRAWINGS ARE TO BE MADE BY THE VENDOR

Revisions

Rev	Date	Description
R-00		

Consultants

Auditorium

Lighting

MEP

GD-HONORIA COURT
Lawrence School Sanawar

Date 09/10/2026
Drawing No. ATA-LSS-GD-6117
Client LSS
Drawn Sanskriti Garg
Revision R- 00
Checked Vaibhav Jain

Scale 1:20/1:2

Drawing
DW SCHEDULE- W4

AISHWARYA TIPNIS ARCHITECTS
83-D, DDA Flats, Masjid Moth Phase II,
Greater Kailash III, New Delhi-110048
T:+ 91-11-29221690 M:91-9873926616
projects@studioata.in
www.studioata.in

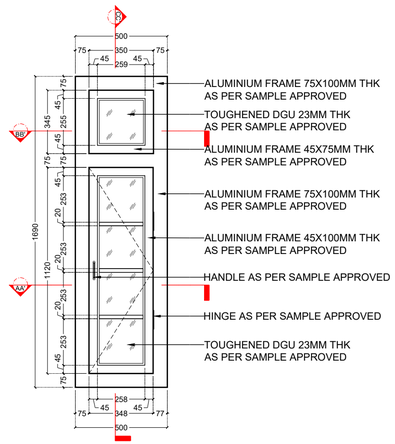

OUTSIDE ELEVATION
SCALE 1:20

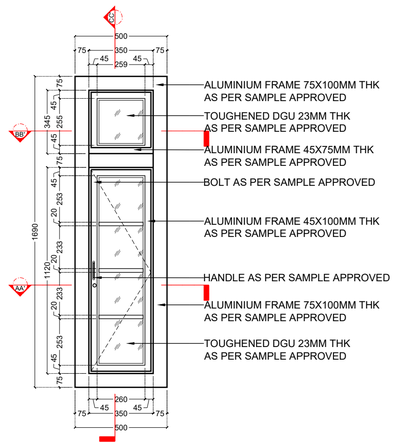

INSIDE ELEVATION
SCALE 1:20

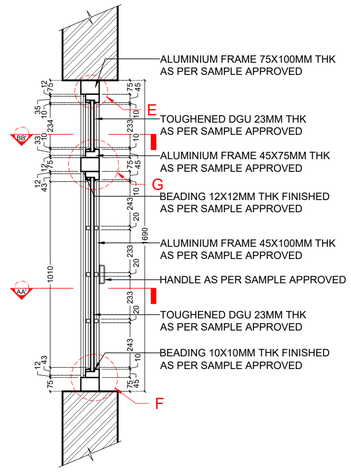

SECTION CC'
SCALE 1:20

PLAN AT AA'
SCALE 1:20

DETAIL A
SCALE 1:2

DETAIL B
SCALE 1:2

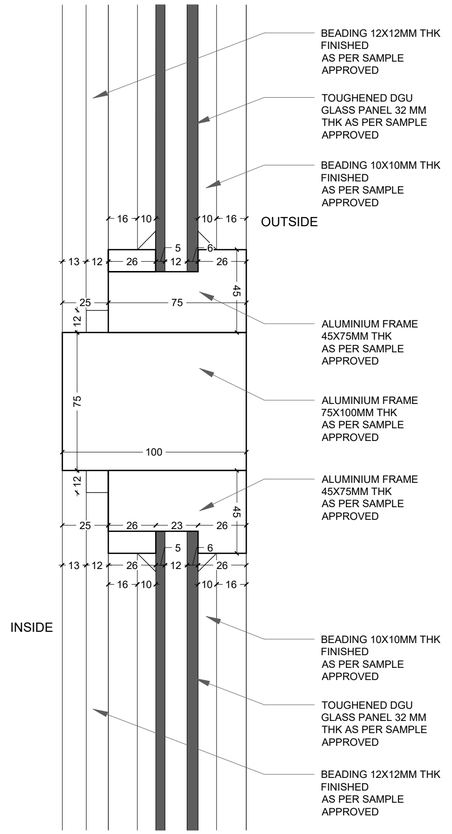

DETAIL G
SCALE 1:2

PLAN AT BB'
SCALE 1:20

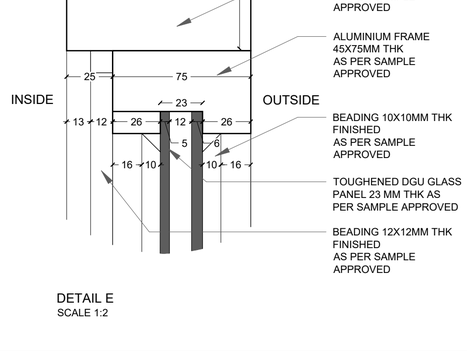

DETAIL E
SCALE 1:2

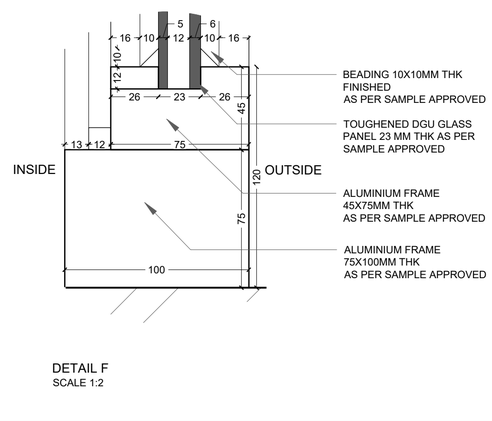

DETAIL F
SCALE 1:2

Notes:
1. Do not scale the drawings. All drawings are to be read and not measured.
2. All dimensions must be checked on site and any discrepancies verified with the architect.
3. This drawing shall be read in conjunction with relevant architectural, structural, and services drawings.
4. Window drawings are for intent only, final windows to be fabricated per approved shop drawings
5. All the windows to be made lockable using Allen Key lock; to be operated only by hotel staff.

© AISHWARYA TIPNIS ARCHITECTS

B. GENERAL ARRANGEMENT (PROPOSED)

TENDER DRAWINGS - DOOR AND WINDOW DETAILS

DOOR WINDOW SCHEDULE

Name	Width (in mm)	Height (in mm)	Sill Level(in mm)	Lintel Level(in mm)
W6	500	1690		

NOTE- THE SHOP DRAWINGS ARE TO BE MADE BY THE VENDOR

Revisions

Rev	Date	Description
R-00		

Consultants

Auditorium

Lighting

MEP

GD-HONORIA COURT
Lawrence School Sanawar

Date 09/10/2026
Drawing No. ATA-LSS-GD-6118
Client LSS
Drawn Sanskriti Garg
Revision R- 00
Checked Vaibhav Jain

Scale 1:20/1:2

Drawing DW SCHEDULE- W6

AISHWARYA TIPNIS ARCHITECTS
83-D, DDA Flats, Masjid Moth Phase II,
Greater Kailash III, New Delhi-110048
T:+ 91-11-29221690 M:91-9873926616
projects@studioata.in
www.studioata.in

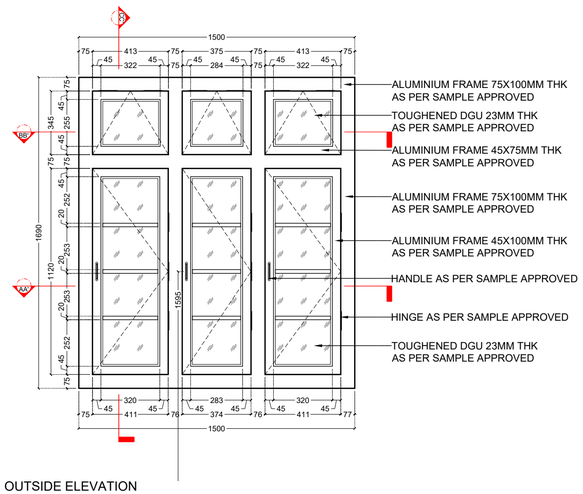

OUTSIDE ELEVATION
SCALE 1:20

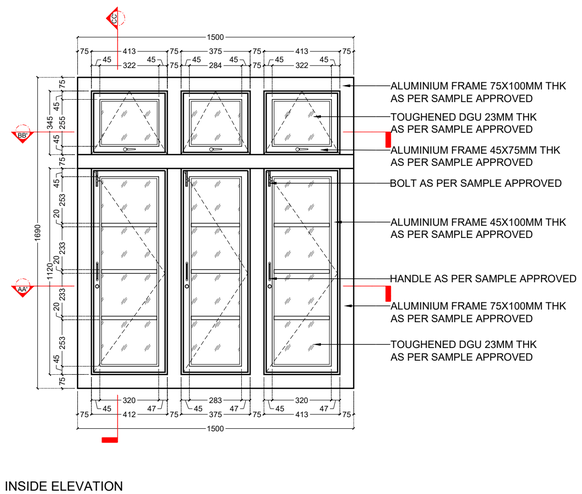

INSIDE ELEVATION
SCALE 1:20

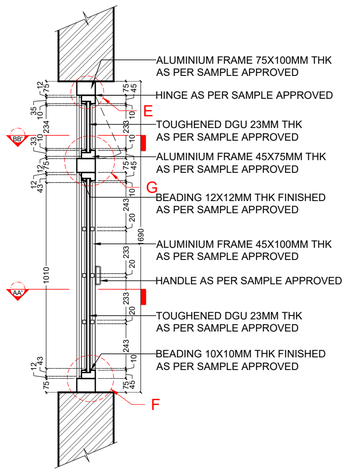

SECTION CC'
SCALE 1:20

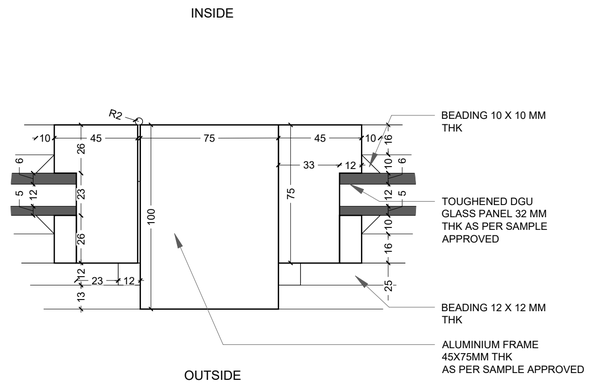

DETAIL B
SCALE 1:2

Notes:
1. Do not scale the drawings. All drawings are to be read and not measured.
2. All dimensions must be checked on site and any discrepancies verified with the architect.
3. This drawing shall be read in conjunction with relevant architectural, structural, and services drawings.
4. Window drawings are for intent only, final windows to be fabricated per approved shop drawings
5. All the windows to be made lockable using Allen Key lock; to be operated only by hotel staff.

© AISHWARYA TIPNIS ARCHITECTS

B. GENERAL ARRANGEMENT (PROPOSED)

TENDER DRAWINGS - DOOR AND WINDOW DETAILS

DOOR WINDOW SCHEDULE

Name	Width (in mm)	Height (in mm)	Sill Level(in mm)	Lintel Level(in mm)
W7	1500	1690	960	2650

NOTE- THE SHOP DRAWINGS ARE TO BE MADE BY THE VENDOR

PLAN AT AA'
SCALE 1:20

DETAIL A
SCALE 1:2

DETAIL C
SCALE 1:2

DETAIL E
SCALE 1:2

DETAIL G
SCALE 1:2

PLAN AT BB'
SCALE 1:20

DETAIL D
SCALE 1:2

DETAIL F
SCALE 1:2

Revisions

Rev	Date	Description
R- 00		

Consultants

Auditorium

Lighting

MEP

GD-HONORIA COURT
Lawrence School Sanawar

Date
09/10/2026

Drawing No.
ATA-LSS-GD-6119

Client
LSS

Drawn
Sanskriti Garg

Revision
R- 00

Checked
Vaibhav Jain

Scale
1:20/1:2

Drawing
DW SCHEDULE- W7

AISHWARYA TIPNIS ARCHITECTS
83-D, DDA Flats, Masjid Moth Phase II,
Greater Kailash III, New Delhi-110048
T:+ 91-11-29221690 M:91-9873926616
projects@studioata.in
www.studioata.in

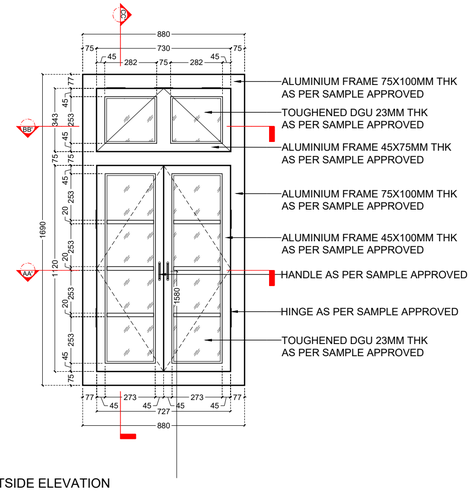

OUTSIDE ELEVATION
SCALE 1:20

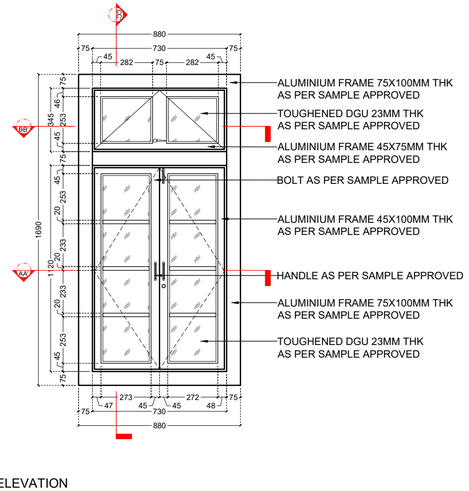

INSIDE ELEVATION
SCALE 1:20

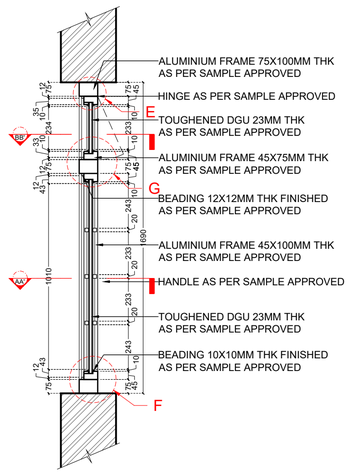

SECTION CC'
SCALE 1:20

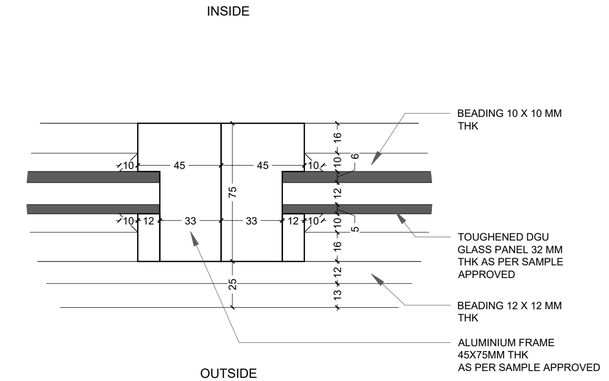

DETAIL B
SCALE 1:2

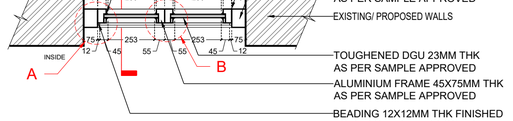

PLAN AT AA'
SCALE 1:20

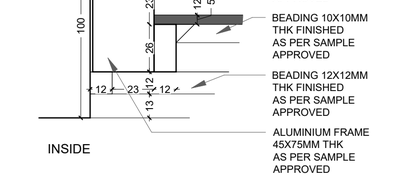

DETAIL A
SCALE 1:2

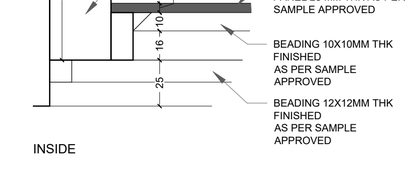

DETAIL C
SCALE 1:2

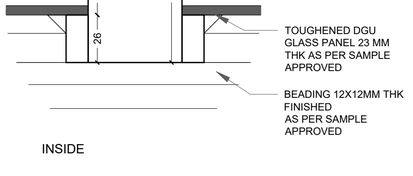

DETAIL D
SCALE 1:2

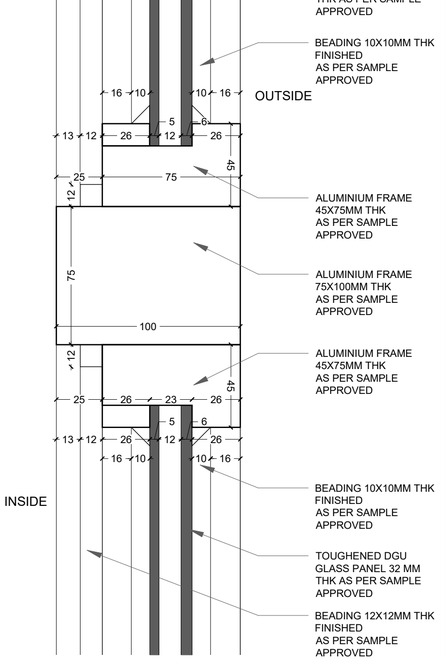

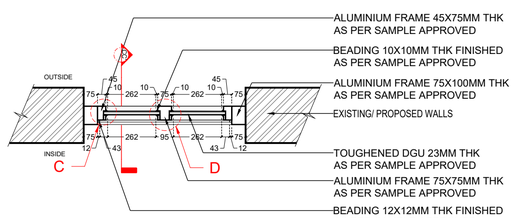

PLAN AT BB'
SCALE 1:20

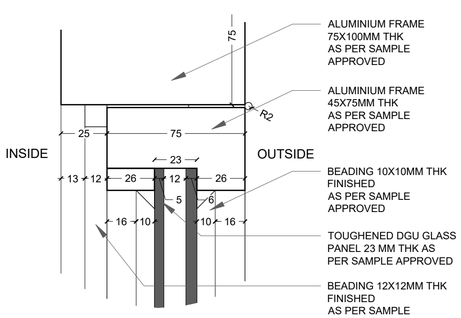

DETAIL E
SCALE 1:2

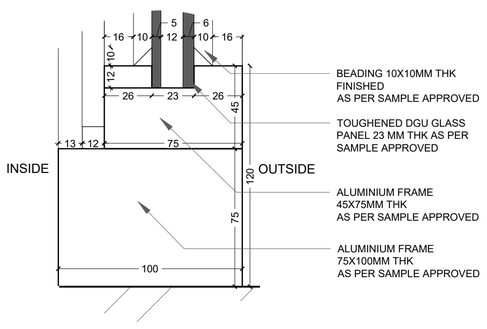

DETAIL F
SCALE 1:2

DETAIL G
SCALE 1:2

Notes:
1. Do not scale the drawings. All drawings are to be read and not measured.
2. All dimensions must be checked on site and any discrepancies verified with the architect.
3. This drawing shall be read in conjunction with relevant architectural, structural, and services drawings.
4. Window drawings are for intent only, final windows to be fabricated per approved shop drawings
5. All the windows to be made lockable using Allen Key lock; to be operated only by hotel staff.

© AISHWARYA TIPNIS ARCHITECTS

B. GENERAL ARRANGEMENT (PROPOSED)

TENDER DRAWINGS - DOOR AND WINDOW DETAILS

DOOR WINDOW SCHEDULE

Name	Width (in mm)	Height (in mm)	Sill Level(in mm)	Lintel Level(in mm)
W8	880	1690	960	2650

NOTE- THE SHOP DRAWINGS ARE TO BE MADE BY THE VENDOR

Revisions

Rev	Date	Description
R-00		

Consultants

Auditorium

Lighting

MEP

GD-HONORIA COURT
Lawrence School Sanawar

Date
09/10/2026

Drawing No.
ATA-LSS-GD-6120

Client
LSS

Drawn
Sanskriti Garg

Revision
R- 00

Checked
Vaibhav Jain

Scale
1:20/1:2

Drawing
DW SCHEDULE- W8

AISHWARYA TIPNIS ARCHITECTS
83-D, DDA Flats, Masjid Moth Phase II,
Greater Kailash III, New Delhi-110048
T:+ 91-11-29221690 M:91-9873926616
projects@studioata.in
www.studioata.in

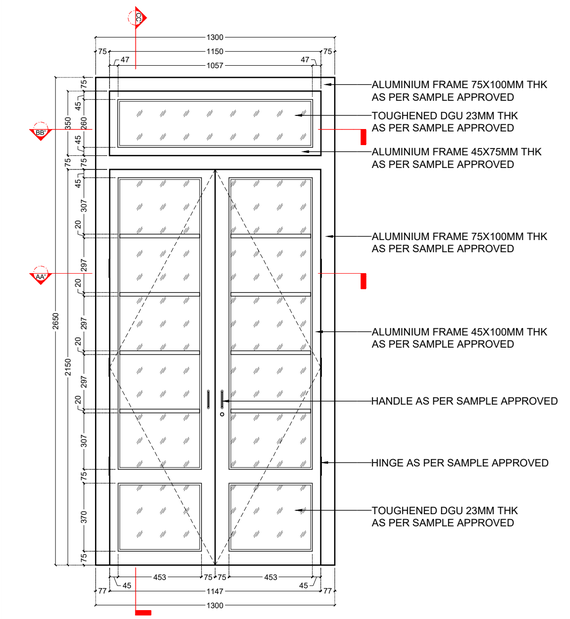

OUTSIDE ELEVATION
SCALE 1:20

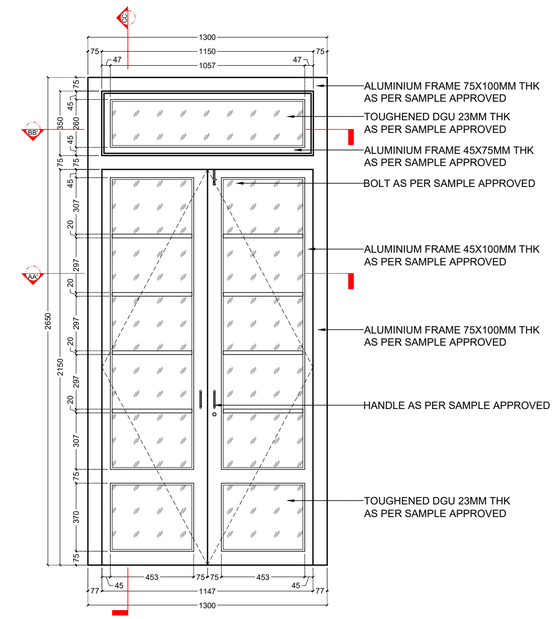

INSIDE ELEVATION
SCALE 1:20

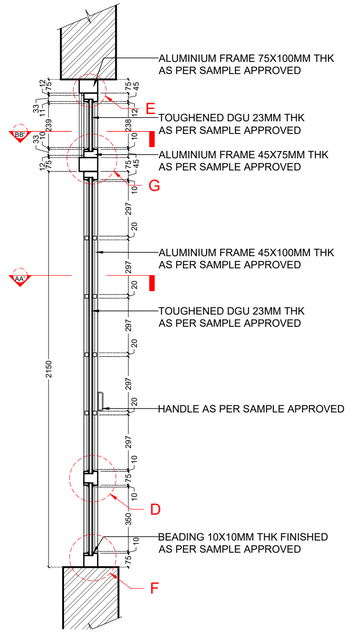

SECTION CC'
SCALE 1:20

INSIDE

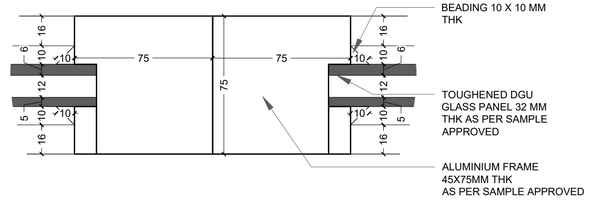

OUTSIDE

DETAIL B
SCALE 1:2

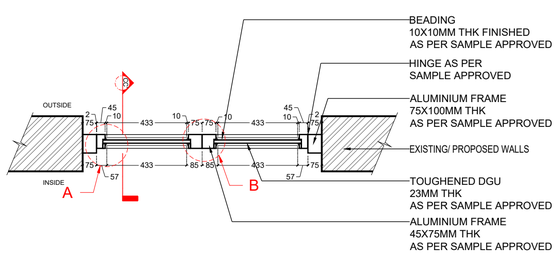

PLAN AT AA'
SCALE 1:20

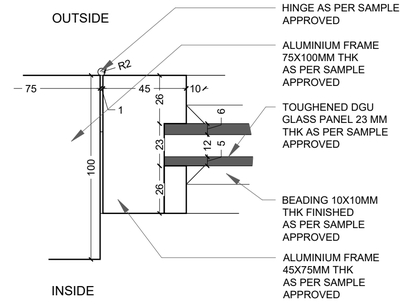

DETAIL A
SCALE 1:2

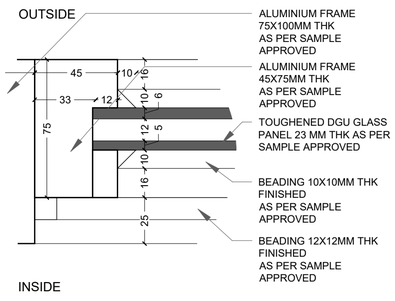

DETAIL C
SCALE 1:2

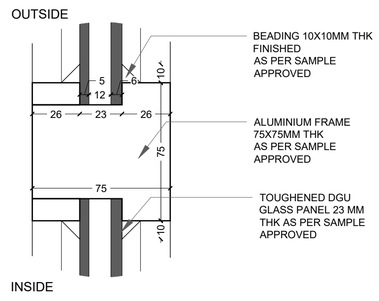

DETAIL D
SCALE 1:2

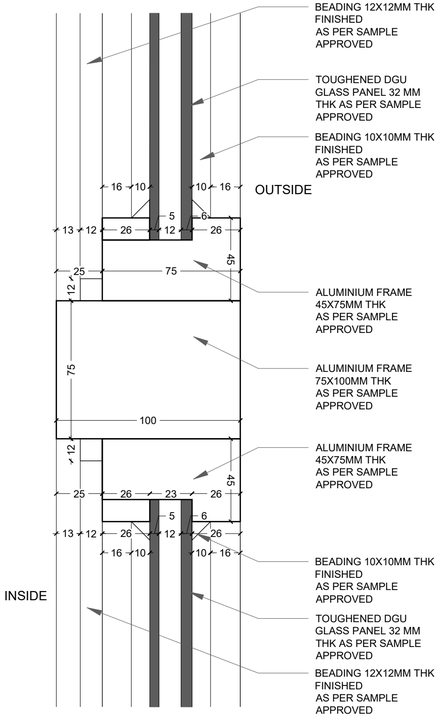

DETAIL G
SCALE 1:2

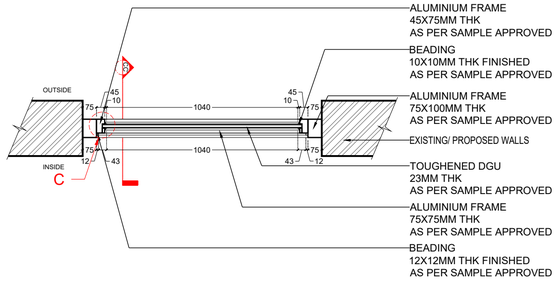

PLAN AT BB'
SCALE 1:20

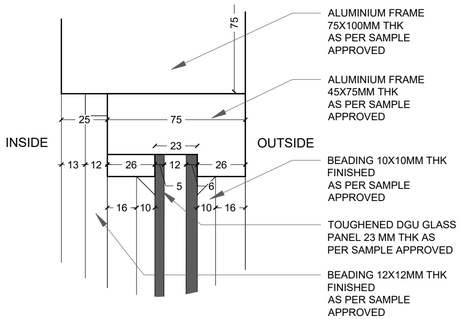

DETAIL E
SCALE 1:2

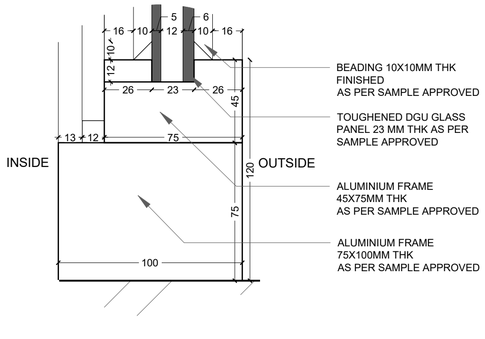

DETAIL F
SCALE 1:2

Notes:
1. Do not scale the drawings. All drawings are to be read and not measured.
2. All dimensions must be checked on site and any discrepancies verified with the architect.
3. This drawing shall be read in conjunction with relevant architectural, structural, and services drawings.
4. Window drawings are for intent only, final windows to be fabricated per approved shop drawings
5. All the windows to be made lockable using Allen Key lock; to be operated only by hotel staff.

© AISHWARYA TIPNIS ARCHITECTS

B. GENERAL ARRANGEMENT (PROPOSED)

TENDER DRAWINGS - DOOR AND WINDOW DETAILS

DOOR WINDOW SCHEDULE

Name	Width (in mm)	Height (in mm)	Sill Level(in mm)	Lintel Level(in mm)
D1	1300	2650		2650

NOTE- THE SHOP DRAWINGS ARE TO BE MADE BY THE VENDOR

Revisions

Rev	Date	Description
R-00		

Consultants

Auditorium

Lighting

MEP

GD-HONORIA COURT
Lawrence School Sanawar

Date 09/10/2026
Drawing No. ATA-LSS-GD-6121
Client LSS
Drawn Sanskriti Garg
Revision R- 00
Checked Vaibhav Jain

Scale 1:20/1:2

Drawing
DW SCHEDULE- D1

AISHWARYA TIPNIS ARCHITECTS
83-D, DDA Flats, Masjid Moth Phase II,
Greater Kailash III, New Delhi-110048
T:+ 91-11-29221690 M:91-9873926616
projects@studioata.in
www.studioata.in

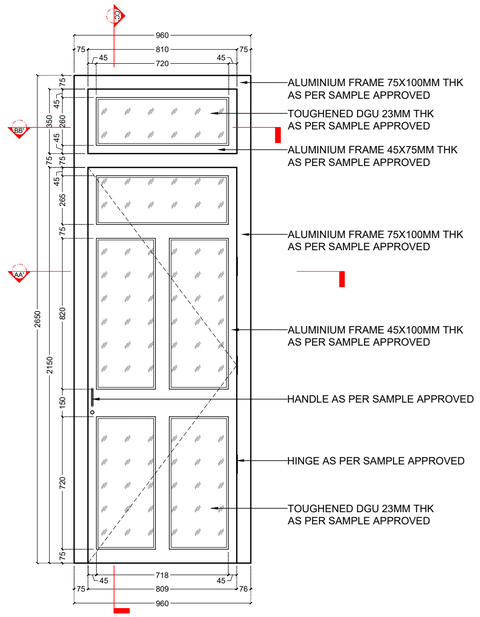

OUTSIDE ELEVATION
SCALE 1:20

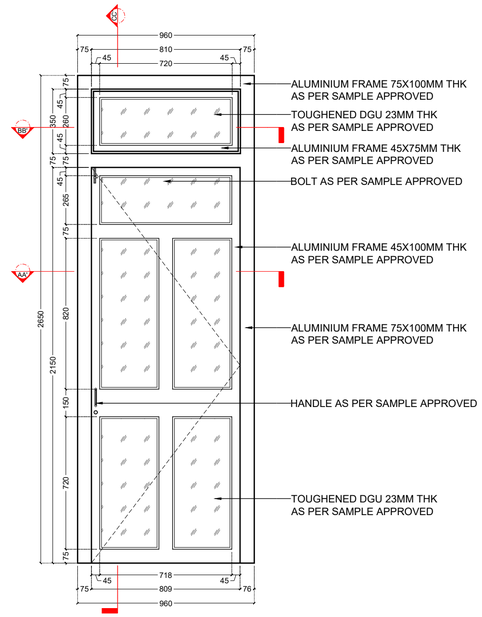

INSIDE ELEVATION
SCALE 1:20

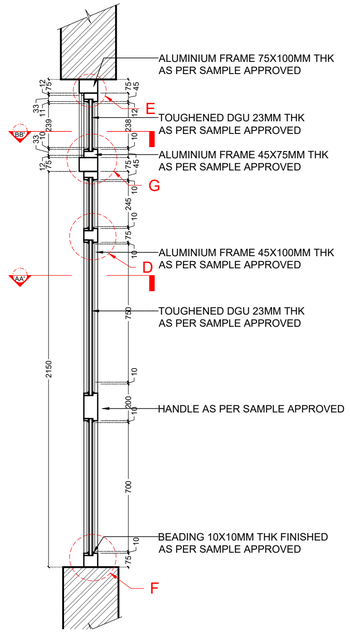

SECTION CC'
SCALE 1:20

INSIDE

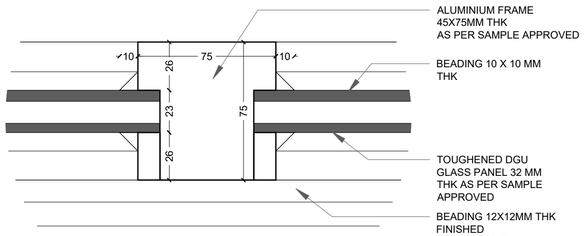

OUTSIDE

DETAIL B
SCALE 1:2

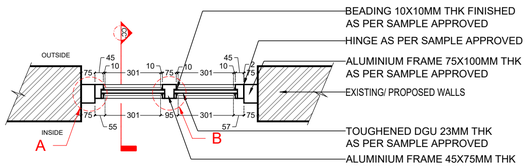

PLAN AT AA'
SCALE 1:20

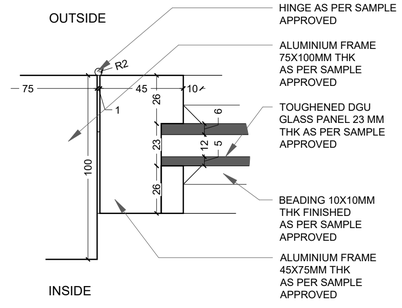

DETAIL A
SCALE 1:2

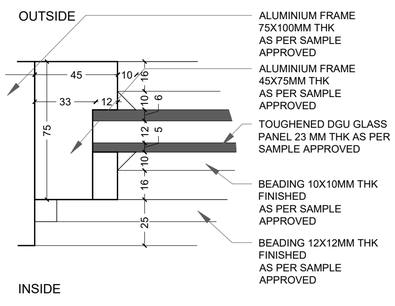

DETAIL C
SCALE 1:2

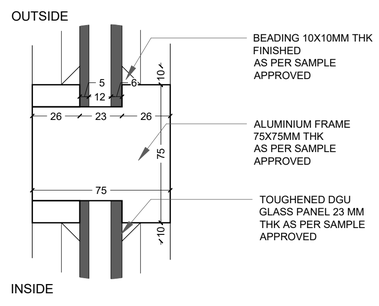

DETAIL D
SCALE 1:2

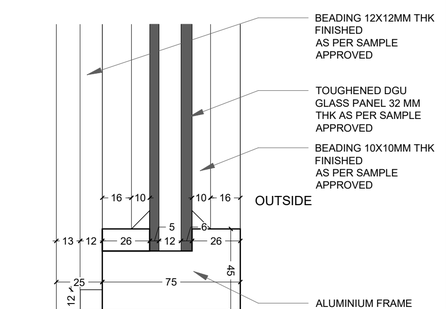

DETAIL G
SCALE 1:2

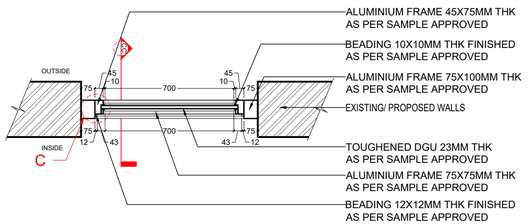

PLAN AT BB'
SCALE 1:20

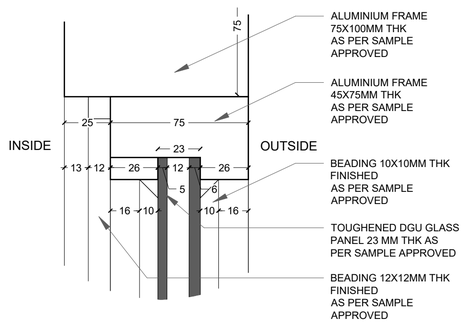

DETAIL E
SCALE 1:2

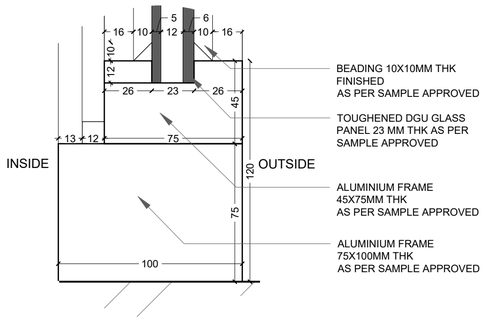

DETAIL F
SCALE 1:2

Notes:
1. Do not scale the drawings. All drawings are to be read and not measured.
2. All dimensions must be checked on site and any discrepancies verified with the architect.
3. This drawing shall be read in conjunction with relevant architectural, structural, and services drawings.
4. Window drawings are for intent only, final windows to be fabricated per approved shop drawings
5. All the windows to be made lockable using Allen Key lock; to be operated only by hotel staff.

© AISHWARYA TIPNIS ARCHITECTS

B. GENERAL ARRANGEMENT (PROPOSED)

TENDER DRAWINGS - DOOR AND WINDOW DETAILS

DOOR WINDOW SCHEDULE

Name	Width (in mm)	Height (in mm)	Sill Level(in mm)	Lintel Level(in mm)
D2	960	2650		2650

NOTE- THE SHOP DRAWINGS ARE TO BE MADE BY THE VENDOR

Revisions

Rev	Date	Description
R-00		

Consultants

Auditorium

Lighting

MEP

GD-HONORIA COURT
Lawrence School Sanawar

Date 09/10/2026
Drawing No. ATA-LSS-GD-6122
Client LSS
Drawn Sanskriti Garg
Revision R- 00
Checked Vaibhav Jain

Scale 1:20/1:2

Drawing
DW SCHEDULE- D2

AISHWARYA TIPNIS ARCHITECTS
83-D, DDA Flats, Masjid Moth Phase II,
Greater Kailash III, New Delhi-110048
T:+ 91-11-29221690 M:91-9873926616
projects@studioata.in
www.studioata.in

AISHWARYA TIPNIS ARCHITECTS

AISHWARYA TIPNIS ARCHITECTS
T: +91 11 29 221690 | M: +91 9873926616
83-D, DDA Flats, Masjid Moth
Phase II, Greater Kailash III,
New Delhi-110048
projects@studioata.in

www.studioata.in

T: +91 11 29 221690 | M: +91 9873926616